SKILLING - HELLE - CHRISTIANSEN - ROBERTSON — Structural & Civil Engineers

PROJECT: THE WORLD TRADE CENTER | TITLE: FLOOR BEAM DIAPHRAGM DETAILS | DATE: 6-7-68

REVISIONS

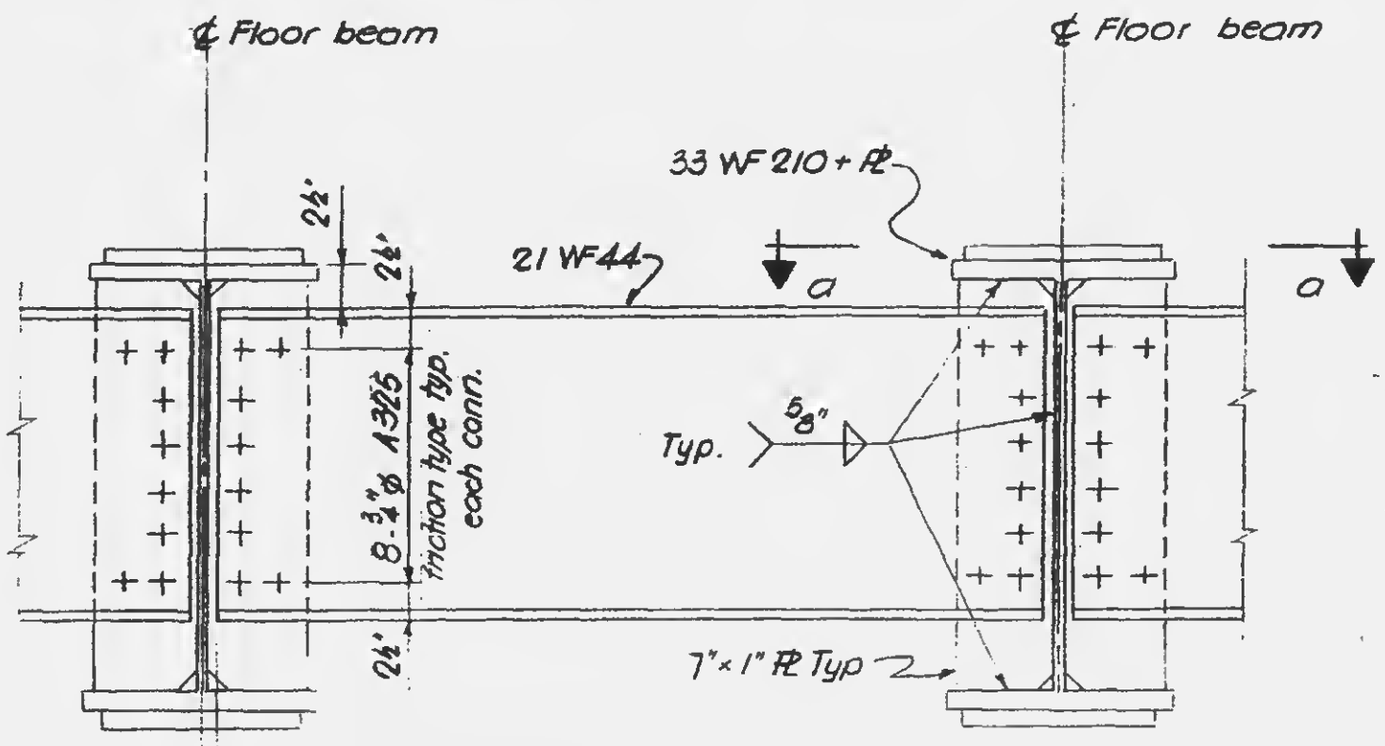

Elevation - typical Diaphragm

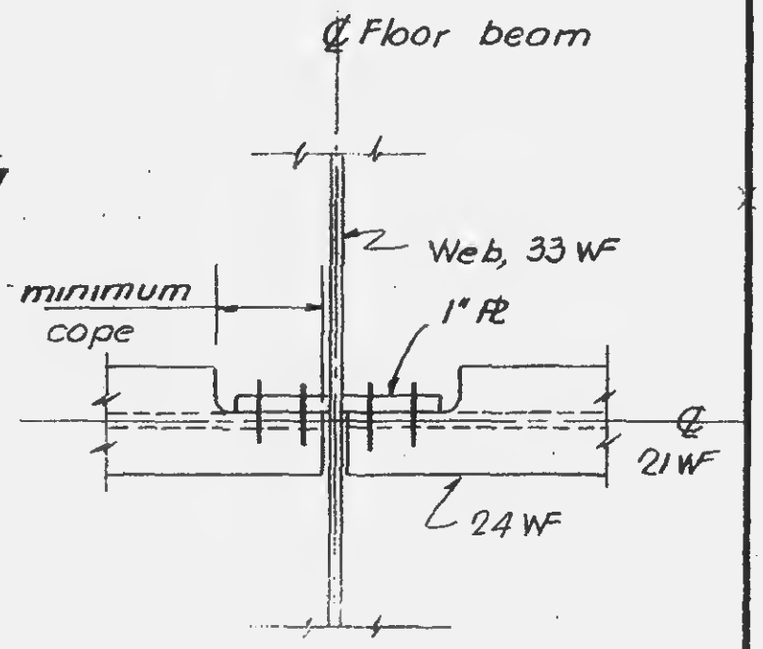

Section a-a

Ref dwgs: S1-76, S1-77

12-JK1-78

LICENSED PROFESSIONAL ENGINEER
LESLIE E. ROBERTSON
No. 34360
UNIVERSITY OF THE STATE OF NEW YORK