REVISIONS

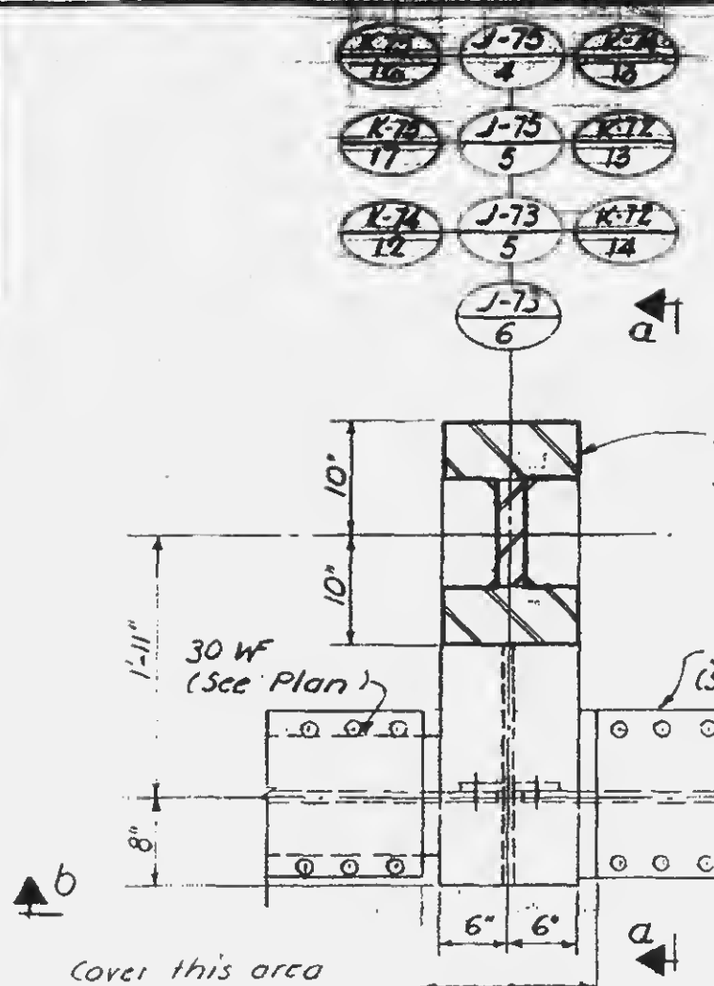

PLAN

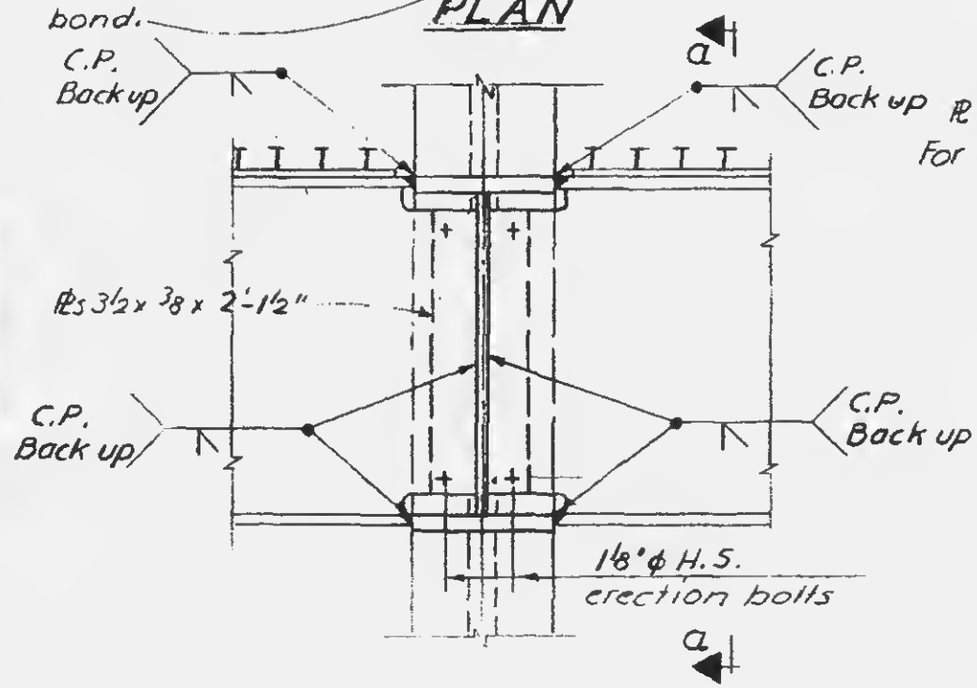

Section b-b

Notes:

1. All welds to be E 70xx.

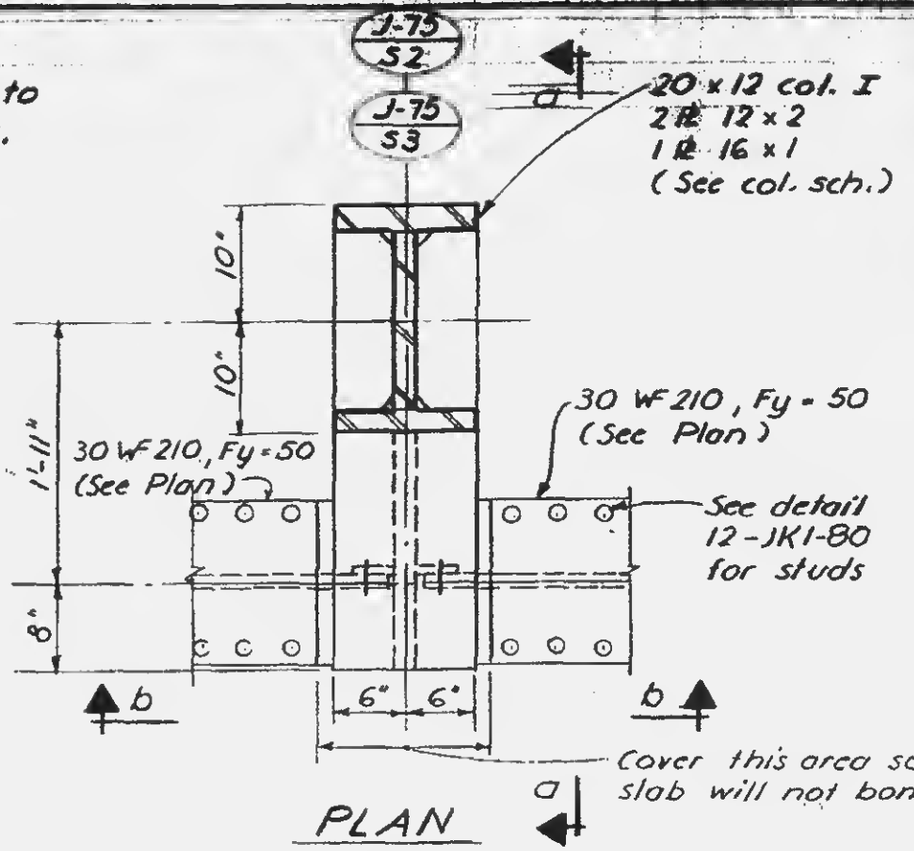

PLAN

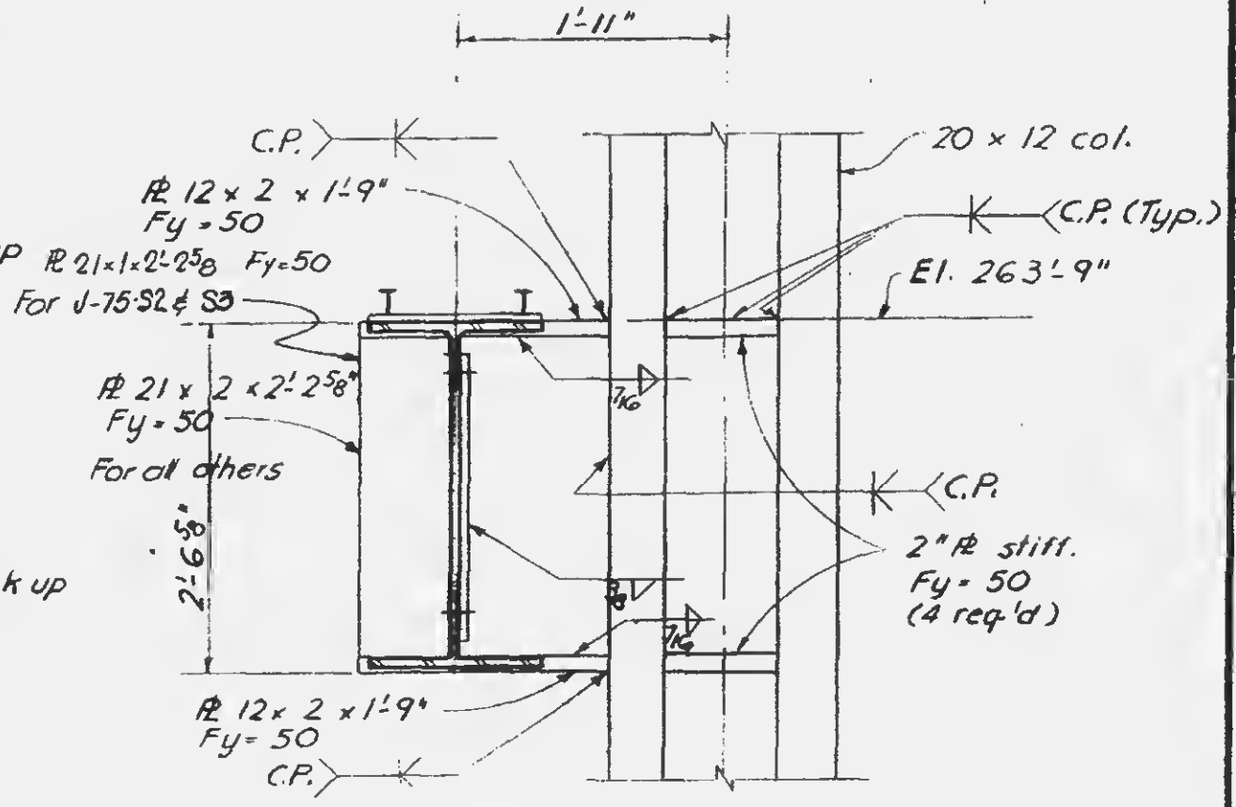

Section a-a

12-JK1-79

LICENSED PROFESSIONAL ENGINEER
LESLIE E. ROBERTSON
No. 34360
UNIVERSITY OF THE STATE OF NEW YORK