SKILLING - HELLE - CHRISTIANSEN - ROBERTSON — Structural & Civil Engineers

PROJECT: THE WORLD TRADE CENTER | TITLE: BEAM CONNECTION DETAIL | DATE: 6-28-68

REVISIONS

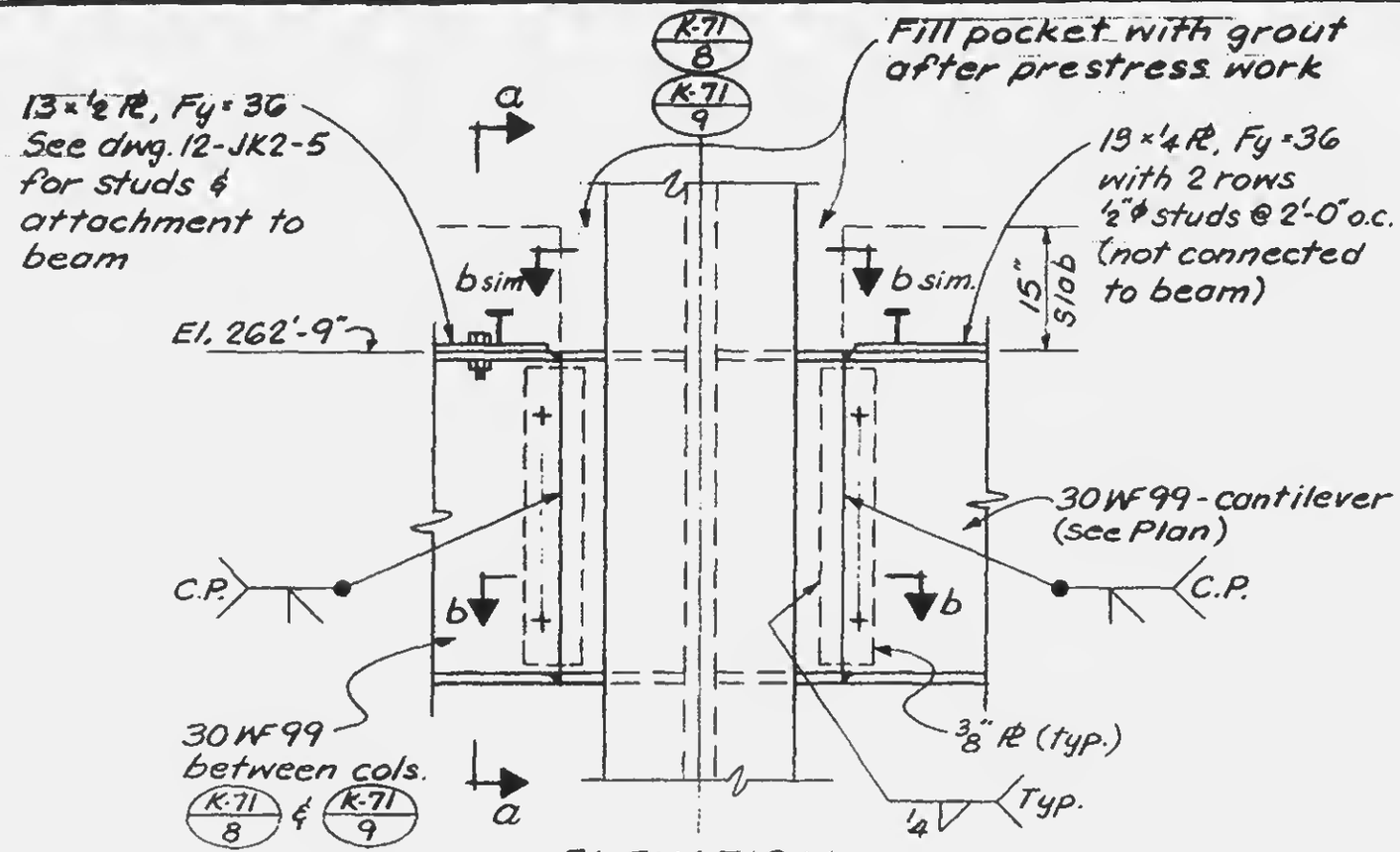

ELEVATION

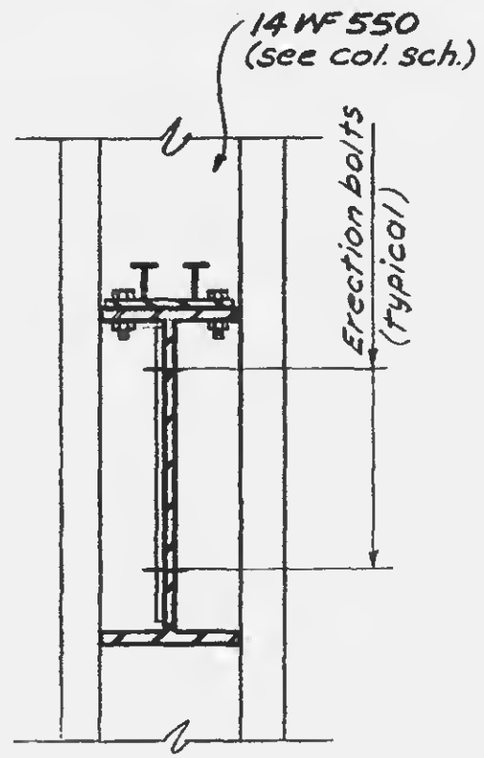

Section a-a

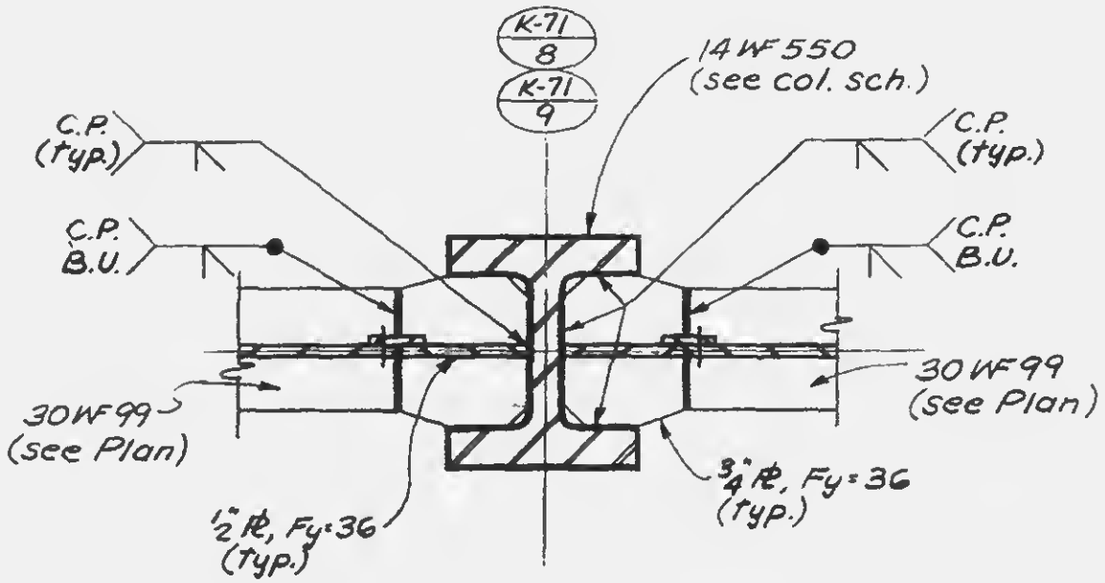

Section b-b

Note:
1. All welds to be E70xx.
2. All bolts to be A325 friction type.

LESLIE E. ROBERTSON — LICENSED PROFESSIONAL ENGINEER — No. 34360 — UNIVERSITY OF THE STATE OF NEW YORK

12-JK1-82