SKILLING, HELLE, CHRISTIANSEN, ROBERTSON — Structural & Civil Engineers

PROJECT: THE WORLD TRADE CENTER | TITLE: BEAM CONNECTION DETAILS | DATE: 3-21-69

REVISIONS

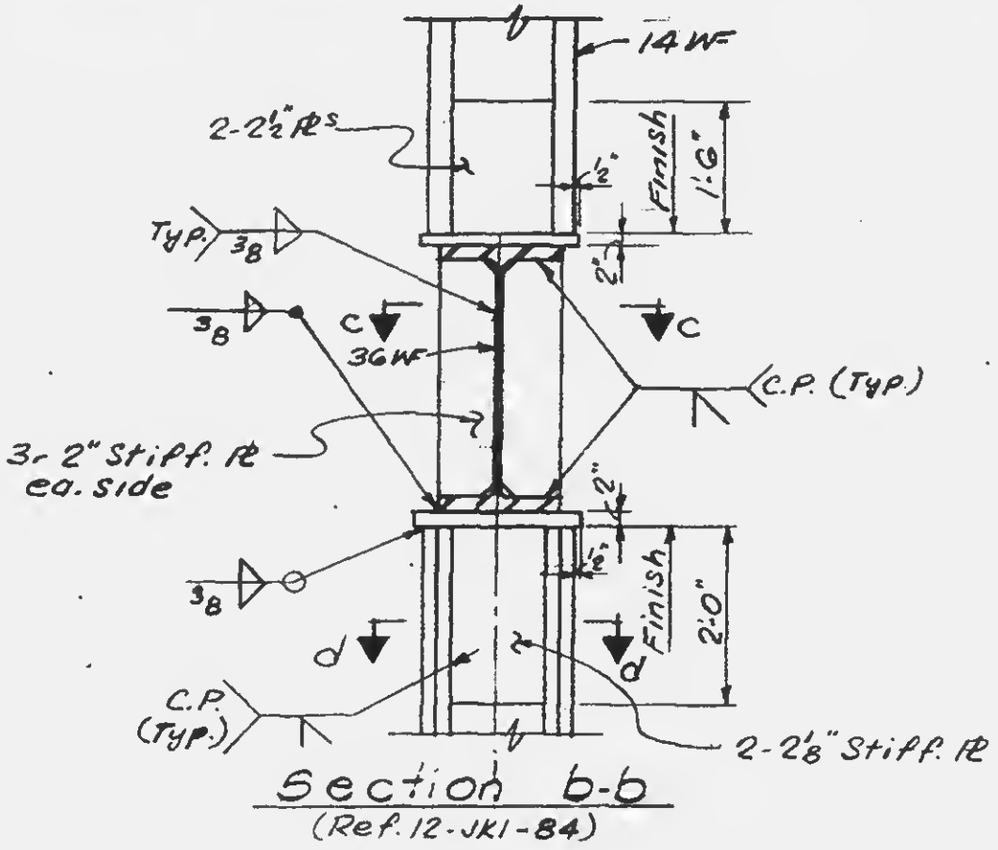

Section b-b
(Ref. 12-JK1-84)

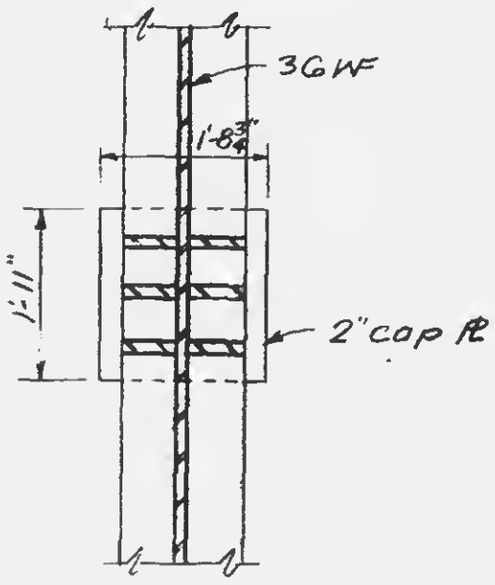

Section c-c

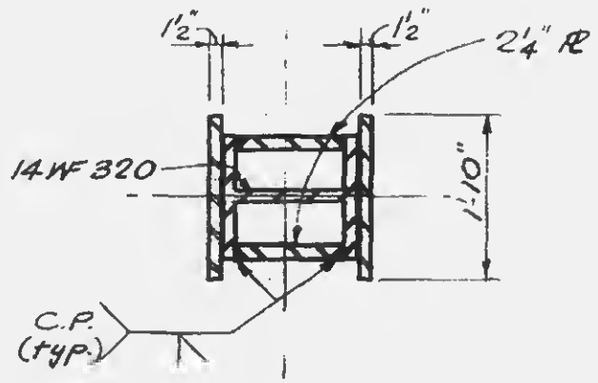

Section d-d

LICENSED PROFESSIONAL ENGINEER — LESLIE E. ROBERTSON — No. 34960 — UNIVERSITY OF THE STATE OF NEW YORK

DESIGNED

DRAWN
S.T.M.

REVIEWED
E.L.

12-JK1-85