SKILLING - HELLE - CHRISTIANSEN - ROBERTSON Structural & Civil Engineers

PROJECT THE WORLD TRADE CENTER | TITLE BEAM CONNECTION DETAIL TO S. OF TOWER "A" - A301 THRU A310 | DATE 11-24-67

REVISIONS

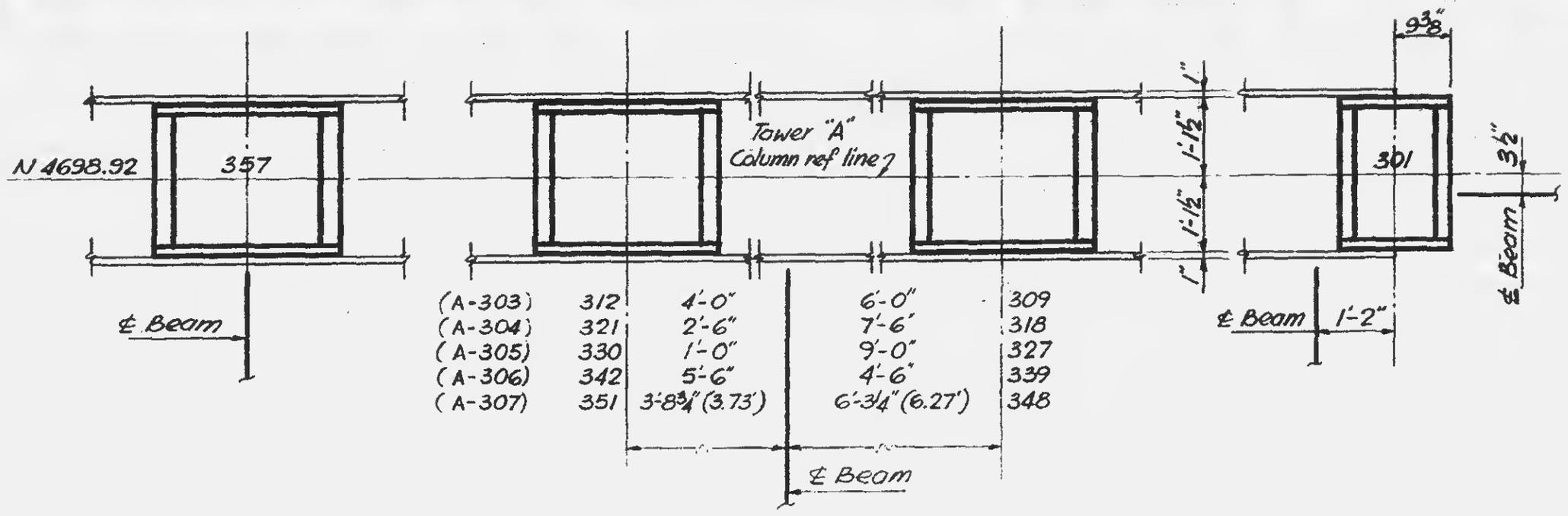

A-308 A-303 Thru A-307 A-301 & A-302

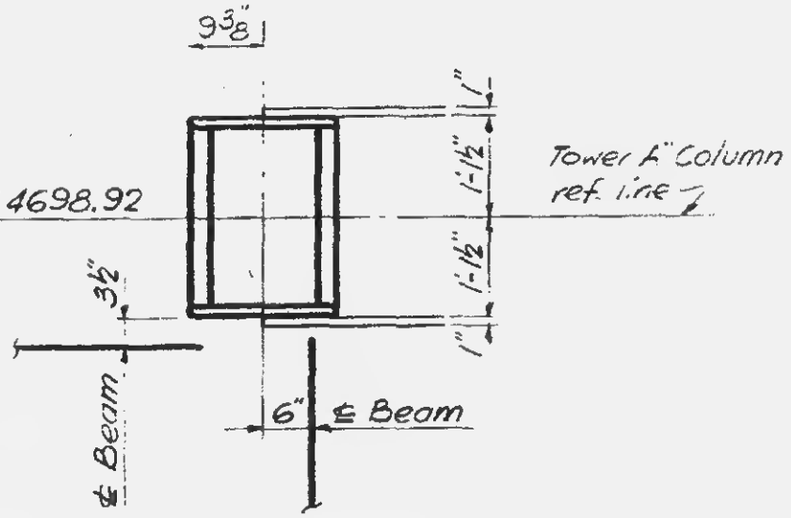

A-309 & A-310

Note:
1. See Schedule on 12-JKI-108



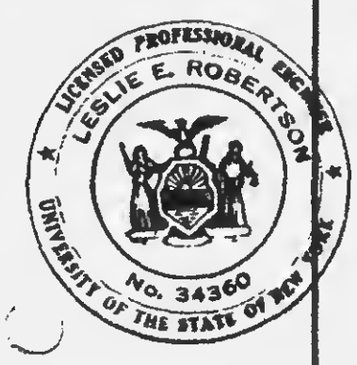

12-JKI-103