SKILLING - HELLE - [illegible] - ROBERTSON Structural & Civil Engineers

PROJECT THE WORLD TRADE CENTER | TITLE BEAM CONNECTION DETAIL TO TOWER - TYPE B & C | DATE 11-24-67

REVISIONS
1-5-68

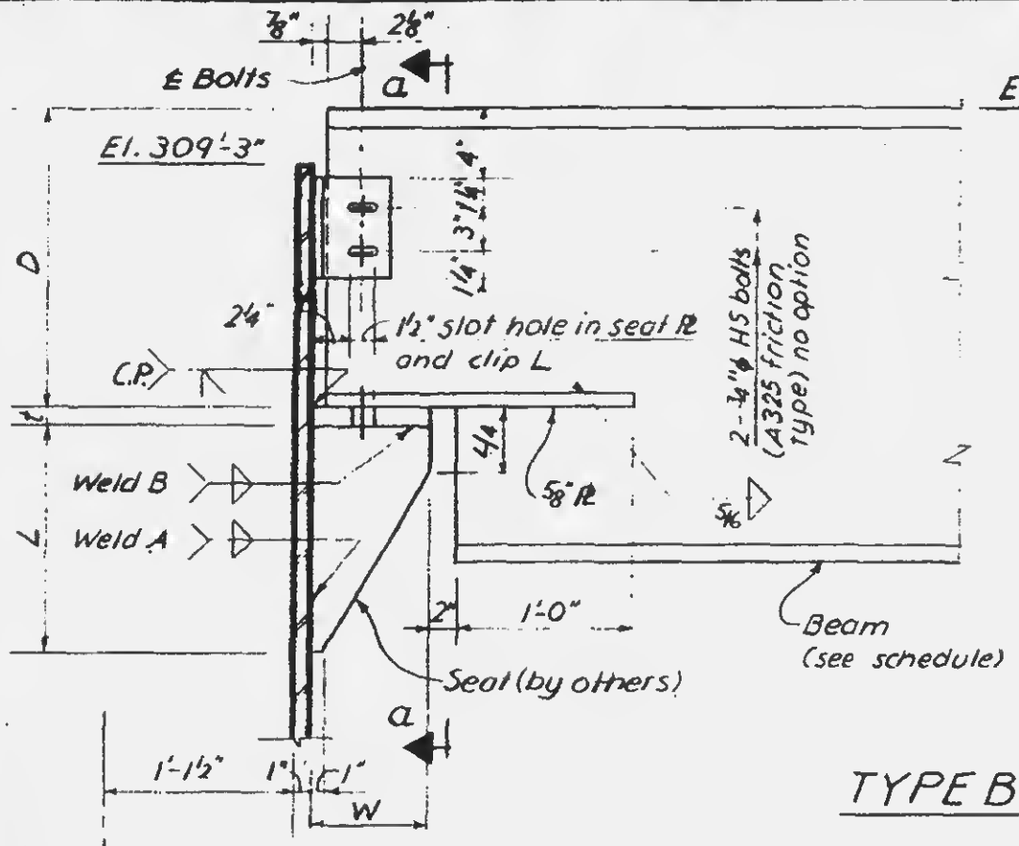

TYPE B

Elevation 2

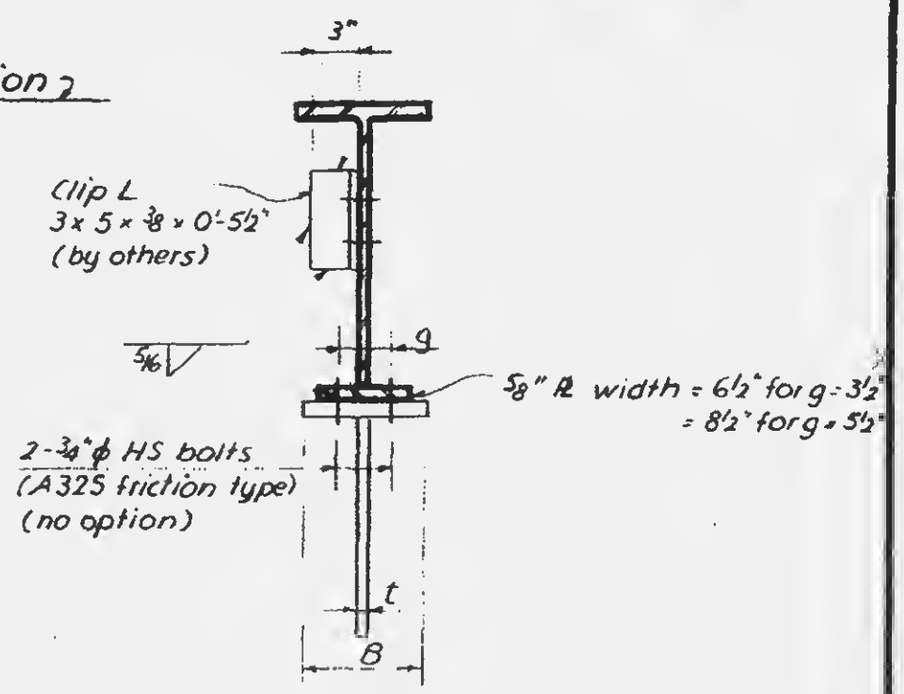

Section a-a

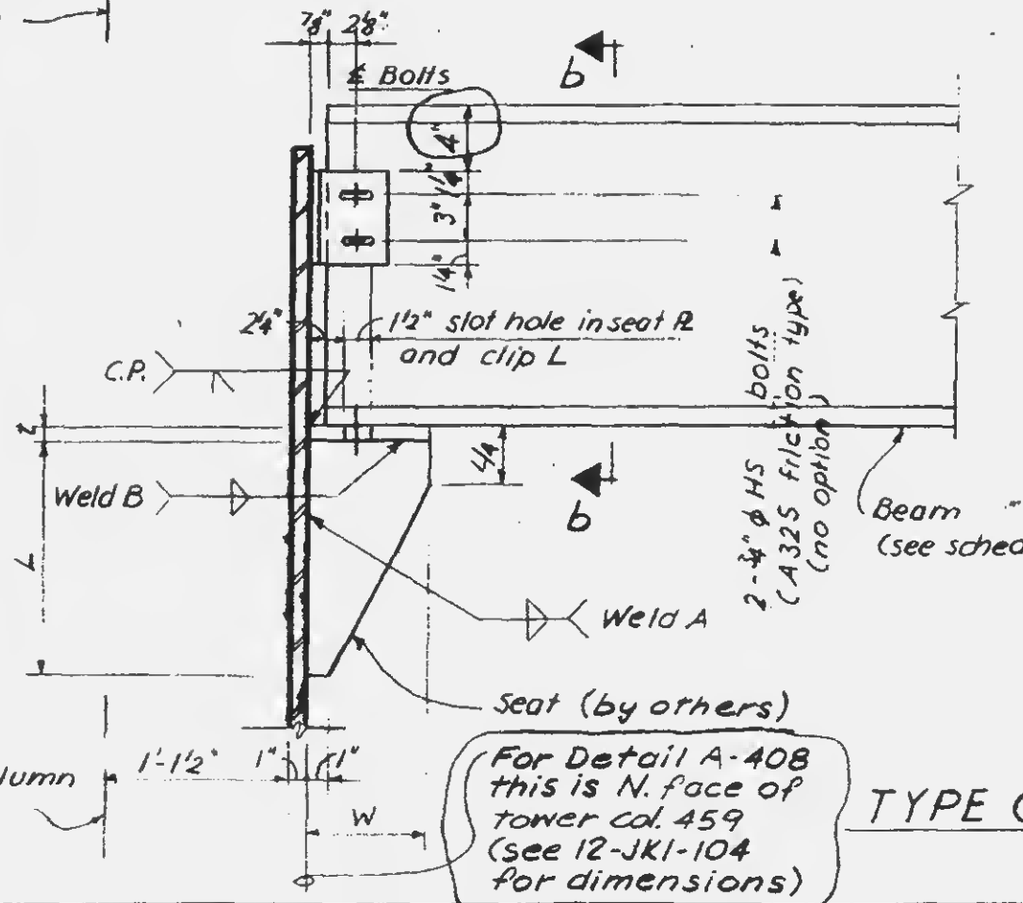

TYPE C

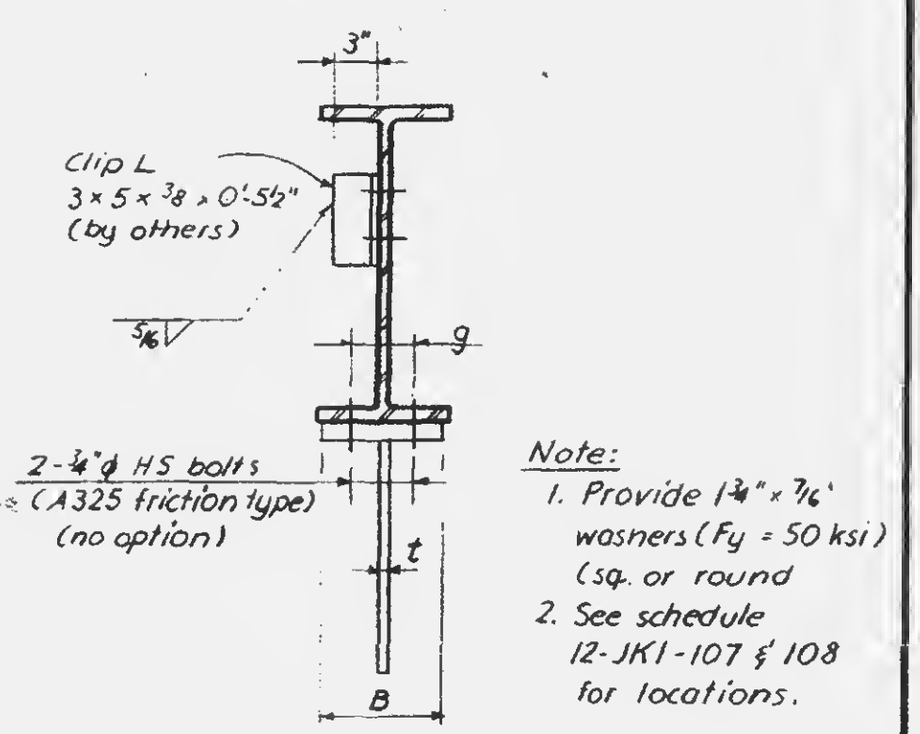

Section b-b

Note:
1. Provide 1 3/4" x 7/16" washers (Fy = 50 ksi) (sq. or round
2. See schedule 12-JK1-107 & 108 for locations.

LICENSED PROFESSIONAL ENGINEER LESLIE E. ROBERTSON UNIVERSITY OF THE STATE OF NEW YORK No. 34360

12-JK1-106