SKILLING - HELLE - CHRISTIANSEN - ROBERTSON — Structural & Civil Engineers

PROJECT: THE WORLD TRADE CENTER | TITLE: DETAIL OF BEAM CONNECTION TO TOWER 'A' | DATE: 11-24-67

REVISIONS
1-5-68

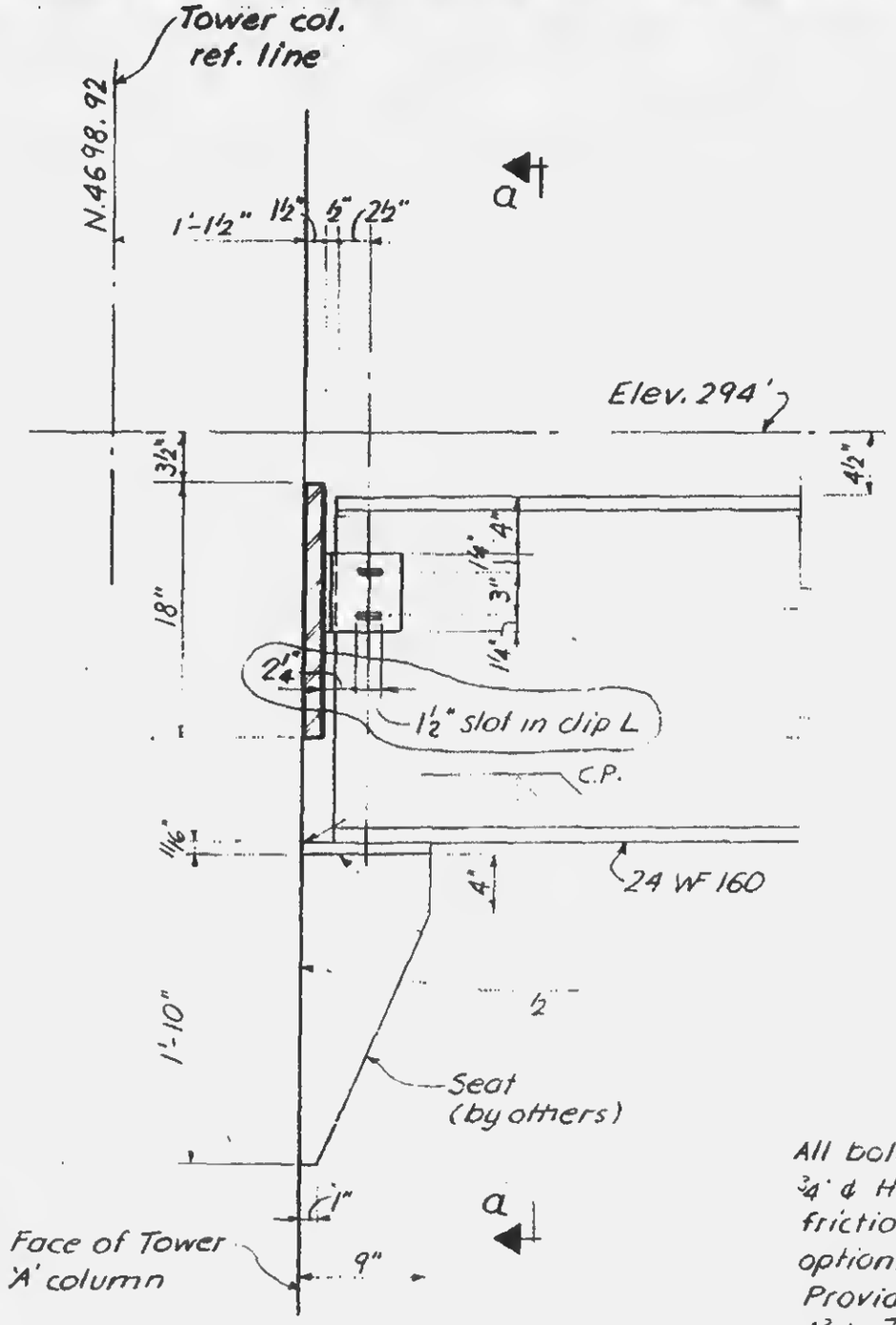

Elevation

All bolts shown to be ¾" ϕ HS bolts (A325 friction type) (no option)
Provide washers 1¼" x 7/16 (sq. or round) with Fy - 50 Ksi.

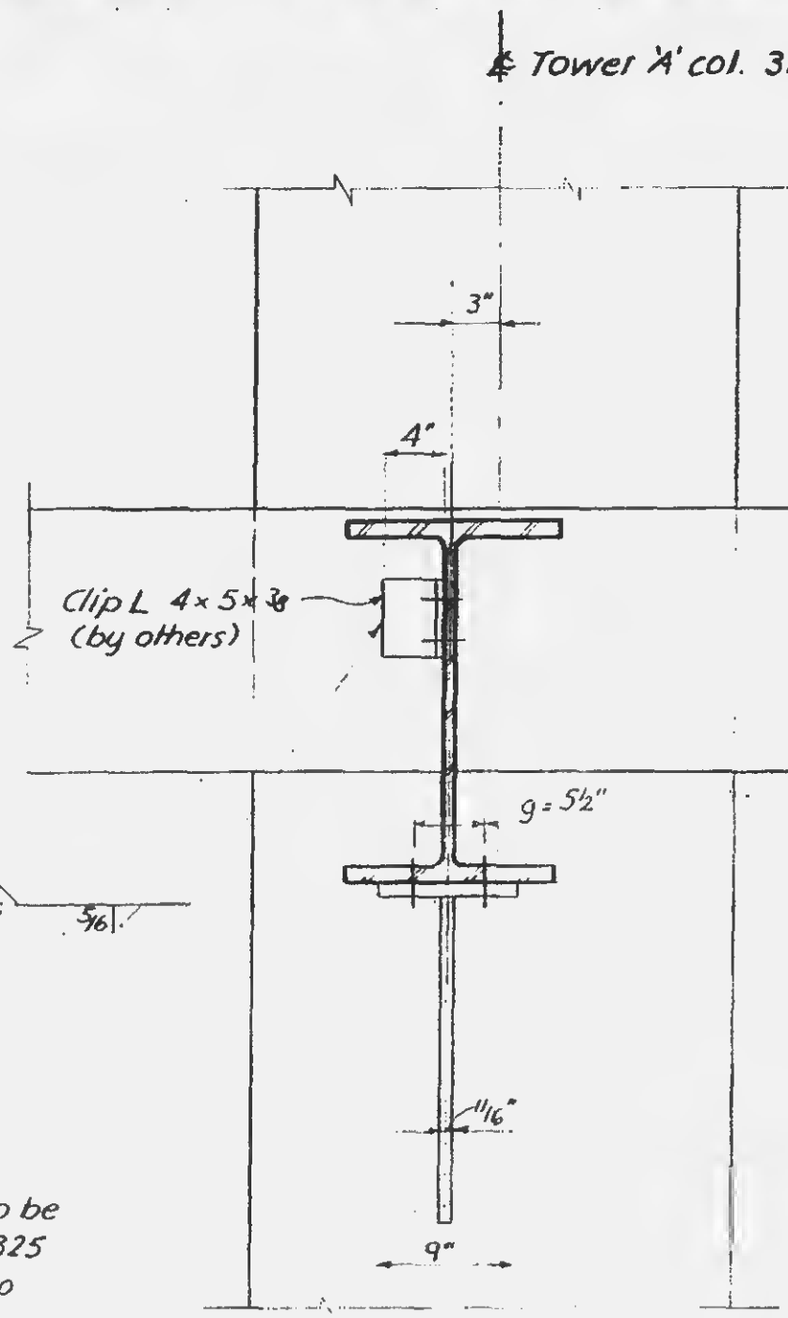

Section a-a



12-JK1-112