SKILLING - HELLE - CHRISTIANSEN - ROBERTSON — Structural & Civil Engineers

PROJECT: THE WORLD TRADE CENTER | TITLE: DETAIL OF BEAM CONNECTION TO TOWER 'A' | DATE: 1-5-68

REVISIONS

1-10-68

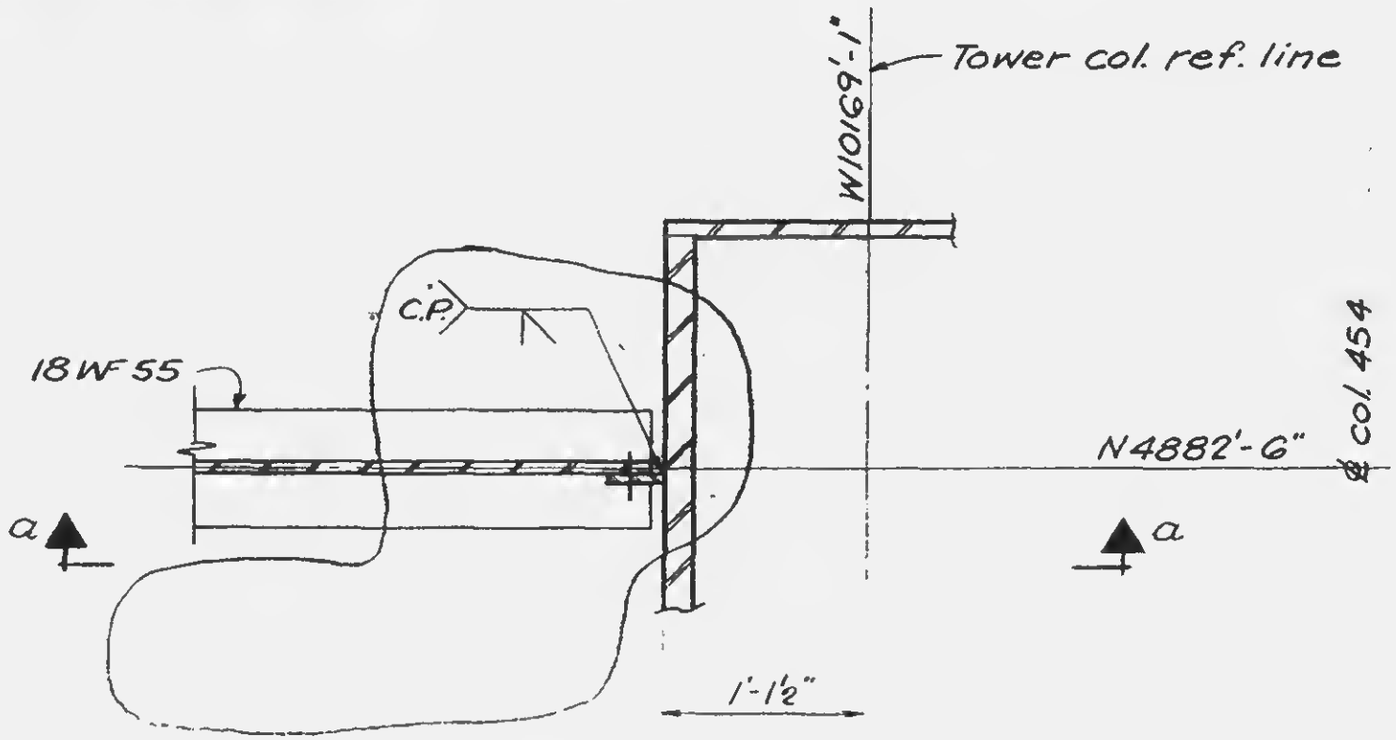

Section b-b

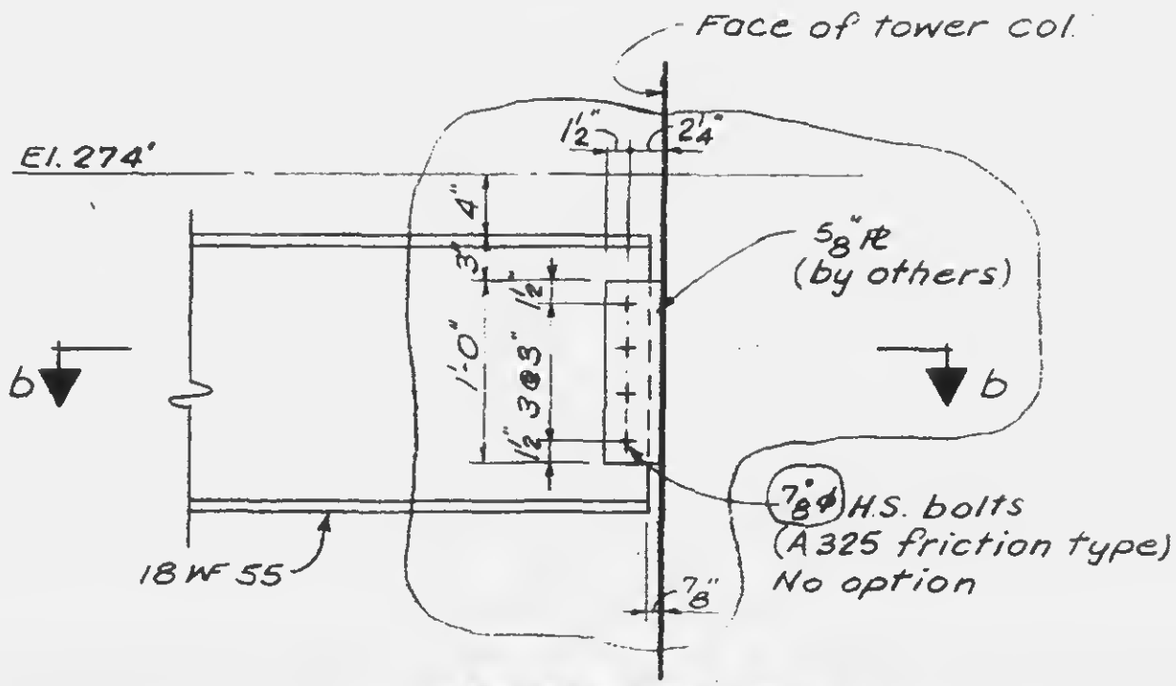

Section a-a

LESLIE E. ROBERTSON
No. 3498

12-JK1-116