SKILLING - HELLE - CHRISTIANSEN - ROBERTSON  Structural & Civil Engineers

PROJECT THE WORLD TRADE CENTER | TITLE DETAIL OF BEAM CONNECTION TO TOWER 'A' | DATE 6-28-68

REVISIONS

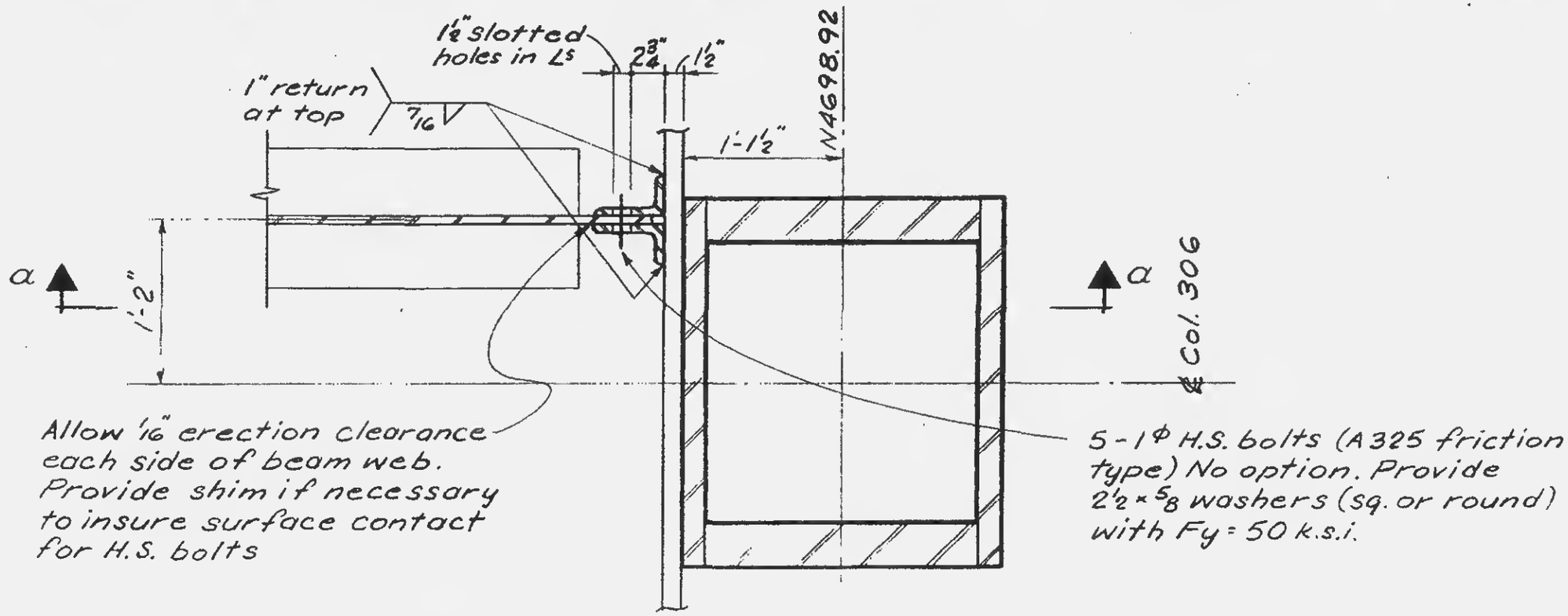


Section b-b

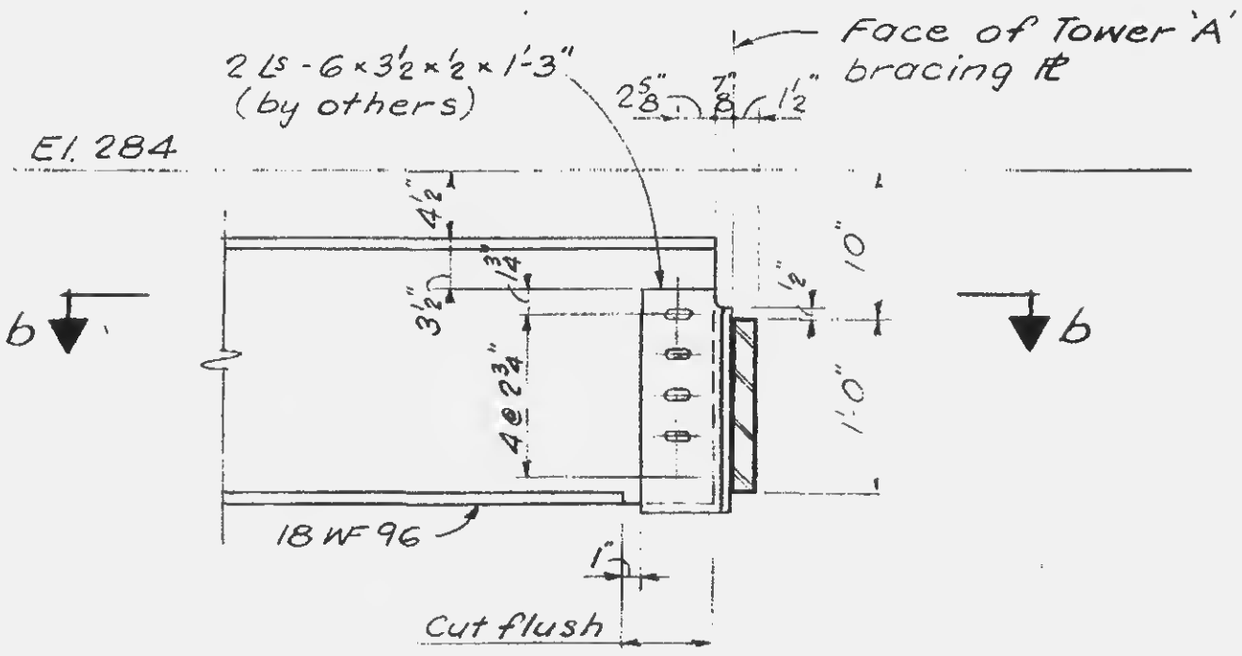


Section a-a

LICENSED PROFESSIONAL ENGINEER
LESLIE E. ROBERTSON
No. 34360
UNIVERSITY OF THE STATE OF NEW YORK

12-JK1-118