SKILLING, HELLE, CHRISTIANSEN, ROBERTSON — Structural & Civil Engineers

PROJECT: THE WORLD TRADE CENTER | TITLE: BEAM CONNECTION TO TOWER 'A' | DATE: 11-27-68

REVISIONS

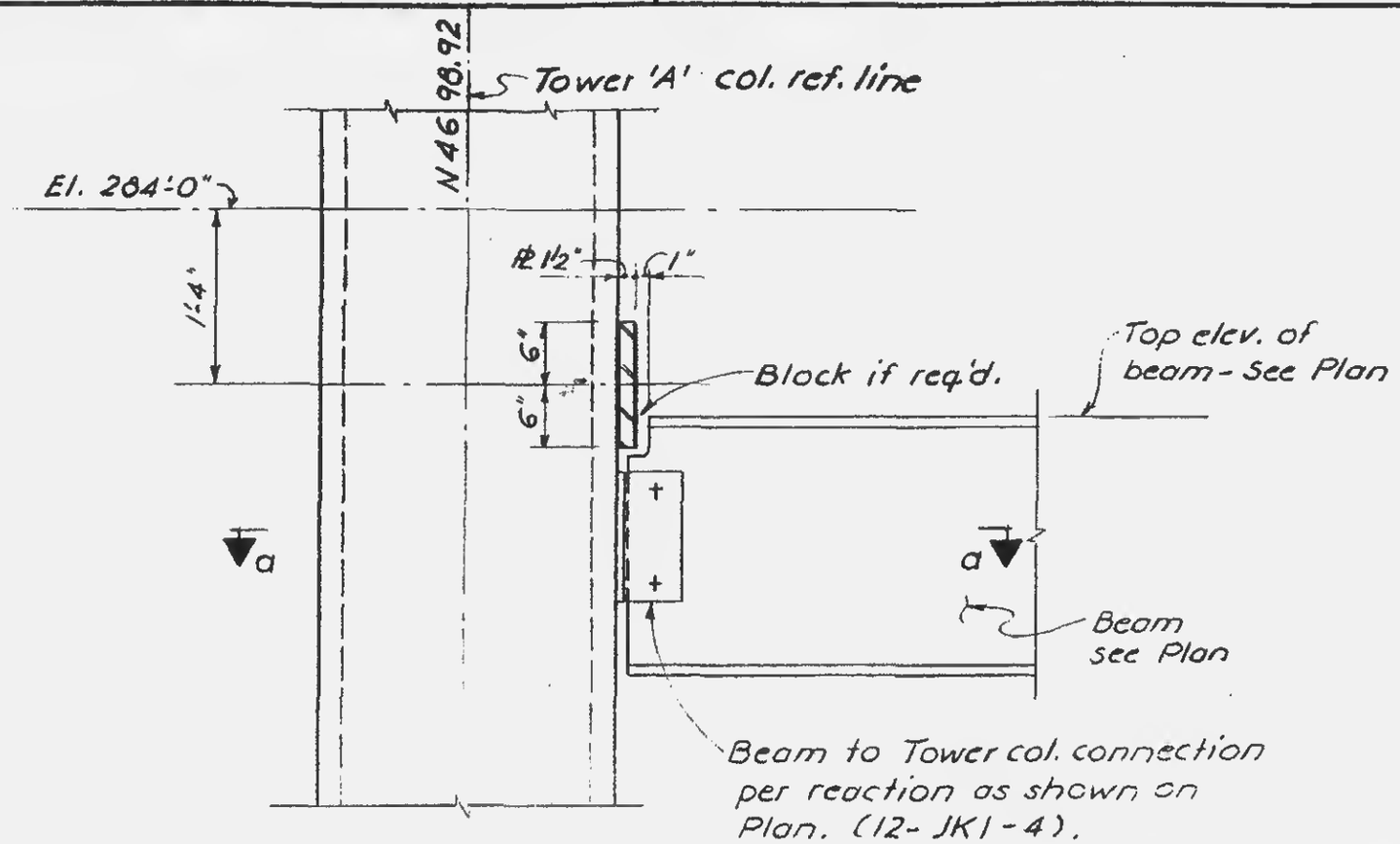

ELEVATION

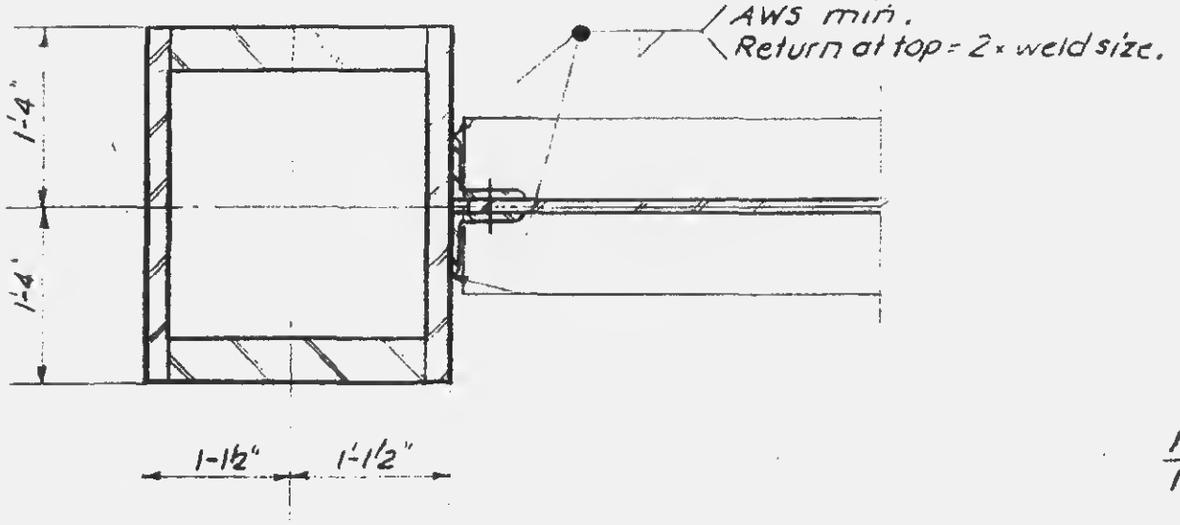

Section a-a

TOWER COLUMN ℄ - THICKNESS	
COL. NO.	t (IN)
303	1½
309	2
315	2¾
321	2¾
327	2⅞
333	3
339	3
351	2¼

Notes:
1. All welds to be E70xx.

LICENSED PROFESSIONAL ENGINEER — LESLIE E. ROBERTSON — No. 34360 — UNIVERSITY OF THE STATE OF NEW YORK

DESIGNED

DRAWN

REVIEWED

12-JK1-121