SKILLING, HELLE, CHRISTIANSEN, ROBERTSON — Structural & Civil Engineers

PROJECT THE WORLD TRADE CENTER | TITLE BRACKET DETAIL | DATE 10-15-68

REVISIONS

5-29-69

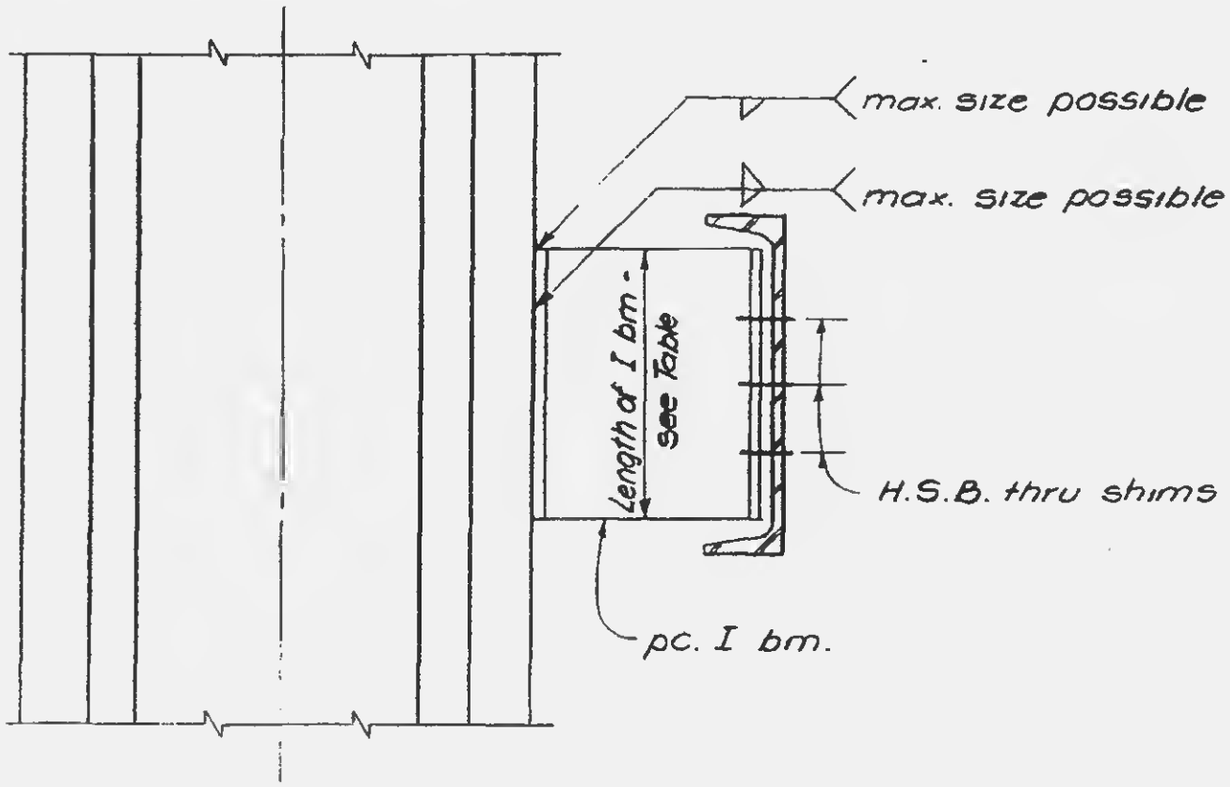

COL.	SIZE OF BRACKET	LENGTH OF BRACKET	NO. & SIZE OF H.S. BOLTS
K35-6	10 I 35	1'-0"	8-$\frac{3}{4}$" ϕ
K37-5	10 I 35	0'-10"	6-$\frac{3}{4}$" ϕ
K37-7	12 I 50	0'-10"	6-$\frac{3}{4}$" ϕ

LICENSED PROFESSIONAL ENGINEER
LESLIE E. ROBERTSON
No. 34360
UNIVERSITY OF THE STATE OF NEW YORK

DESIGNED

DRAWN G.H.

REVIEWED E.L.

12-JK1-172