Civil & Structural Engineers

PROJECT THE WORLD TRADE CENTER | TITLE TYPICAL BEAM DETAILS | DATE 5-15-67

REVISIONS
10-20-67
6-7-68
7-19-68

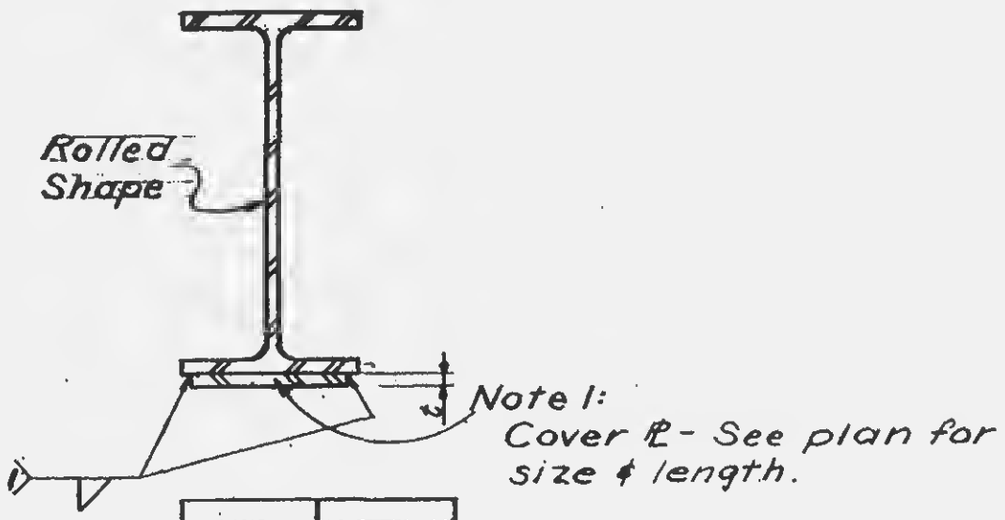

"t"	Weld 1
3/0	1/4
7/16	1/4
1/2	1/4
9/16	5/16
5/0	5/16
11/16	5/16
3/4	5/16
13/16	5/16
7/8	5/16
15/16	5/16
1	5/16
1 1/4	3/8
1 1/2	3/8
1 3/4	3/8
2	1/2

TYPE 2

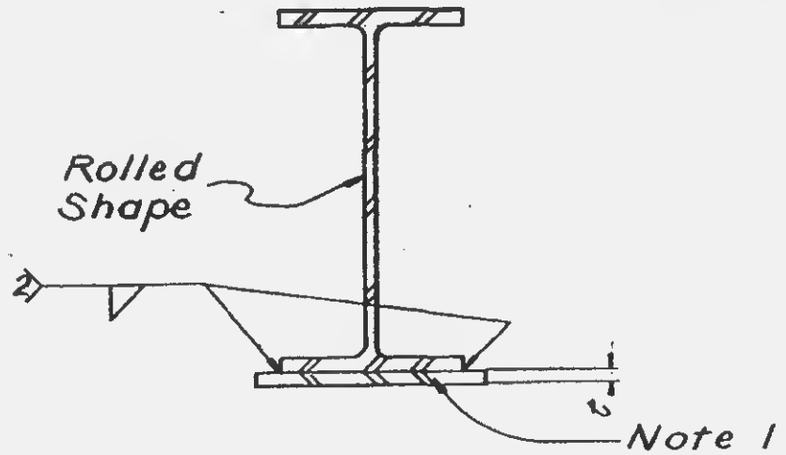

"t"	Weld 2
3/0	1/4
7/16	1/4
1/2	1/4
9/16	5/16
5/8	5/16
11/16	5/16
3/4	5/16
13/16	5/16
7/8	5/16
15/16	5/16
1	5/16
1 1/4	3/8
1 1/2	3/8
1 3/4	3/8
2	1/2

TYPE 3

Notes:
1. Where 2 cover ℄s are used, thicker ℄ to be welded to Rolled Shape.
Use "t" of thicker ℄ to figure weld size BTW. ℄s (but not greater than thickness of thinner ℄)

LICENSED PROFESSIONAL ENGINEER
LESLIE E. ROBERTSON
No. 34360
OF THE STATE OF NEW YORK

12-JK2-2