WORTHINGTON, SKILLING, HELLE & JACKSON — Civil & Structural Engineers

PROJECT: TYPICAL TRADE CENTER | TITLE: TYPICAL BEAM DETAIL | DATE: 5-15-67

REVISIONS
10-20-67
7-19-68

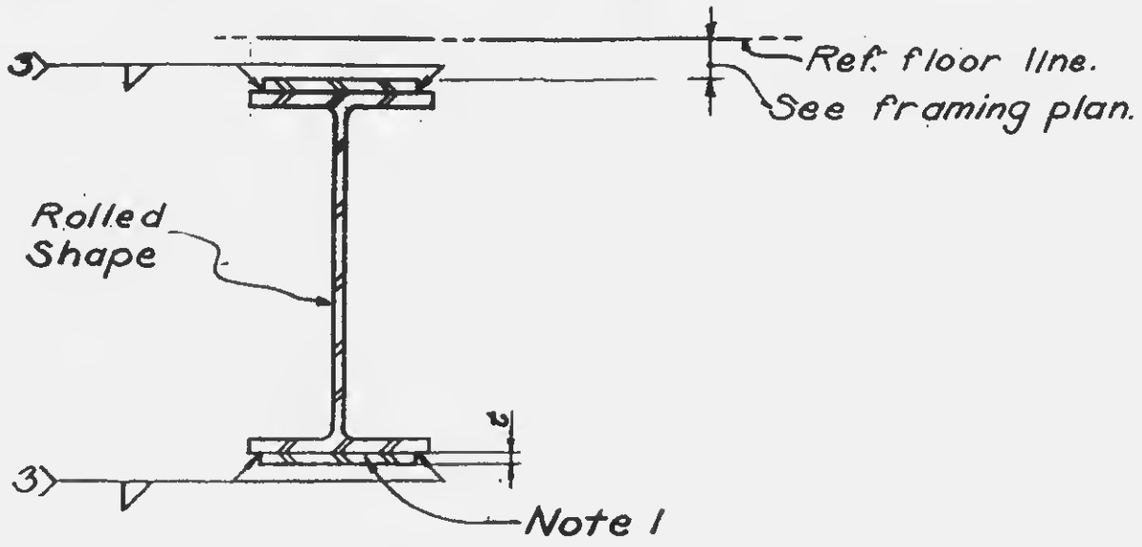

"t"	Weld 3
3/8	1/4
7/16	1/4
1/2	1/4
9/16	5/16
5/8	5/16
11/16	5/16
3/4	5/16
13/16	5/16
7/8	5/16
15/16	5/16
1	5/16
1 1/4	3/8
1 1/2	3/8
1 3/4	3/8
2	1/2

TYPE 4

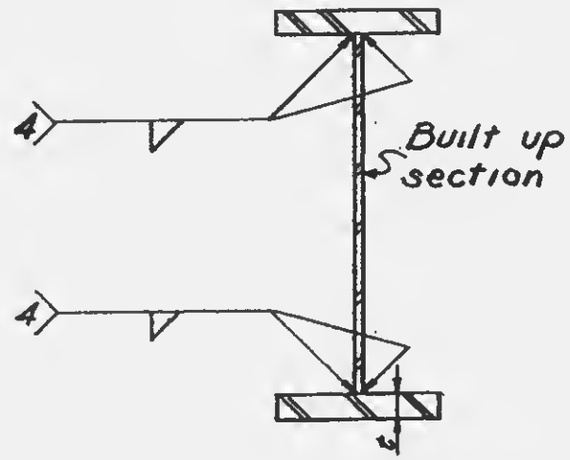

"t"	Weld 4
3/4	1/4
7/8	5/16
1	5/16
1 1/8	5/16
1 1/4	5/16
1 3/8	5/16
1 1/2	5/16
1 5/8	3/8
1 3/4	3/8
1 7/8	3/8
2	3/8
2 1/4	3/8
2 1/2	1/2
2 3/4	1/2
3	1/2
3 1/4	1/2
3 1/2 or over	1/2

TYPE 5

Notes:
1. Where 2 cover Pls are used, thicker Pl to be welded to Rolled Shape. Use "t" of thicker Pl to figure weld size BTW. Pls (but not greater than thickness of thinner Pl)

LICENSED PROFESSIONAL ENGINEER
LESLIE E. ROBERTSON
No. 34360
OF THE STATE OF NEW YORK

12-JK2-3