WORTHINGTON, [illegible] & JACKSON — Civil & Structural Engineers

PROJECT	TITLE	DATE
THE WORLD TRADE CENTER	TYPICAL BEAM DETAILS	5 - 15 - 67

REVISIONS

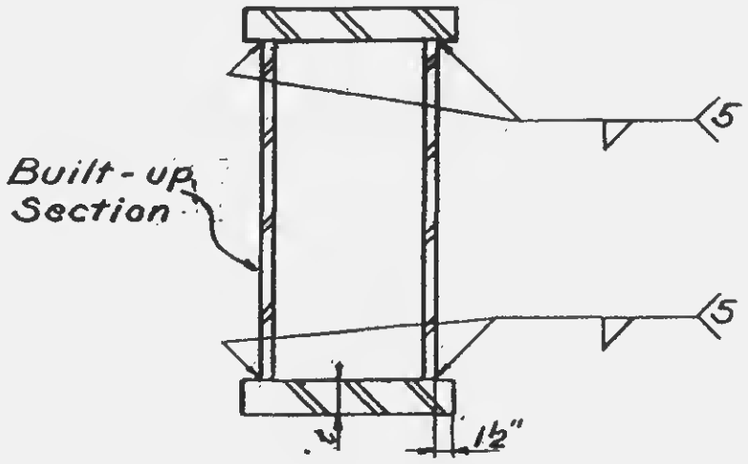

TYPE 6

"t"	WELD 5
3/4	1/4
7/8	5/16
1	5/16
1'0	5/16
1'4	5/16
1'3/8	5/16
1'2	5/16
1'5/8	3/8
1'3/4	3/8
1'7/8	3/8
2	3/8
2'1/4	3/8
2'1/2	1/2
2'3/4	1/2
3	1/2
3'1/4	1/2
3'1/2 or over	1/2

LICENSED PROFESSIONAL ENGINEER
LESLIE E. ROBERTSON
No. 34360
OF THE STATE OF NEW YORK

12 - JK2 - 4