SKILLING - HELLE - CHRISTIANSEN - ROBERTSON — Structural & Civil Engineers

PROJECT THE WORLD TRADE CENTER | TITLE BEAM AND GIRDER DTLS. - SPRINKLER PIPE HOLES | DATE 6-7-68

REVISIONS

SCHEDULE - HOLES IN WEBS OF BEAMS & GIRDERS			
MARK	DIAMETER	ELEV. OF ℄ HOLE	REINFORCEMENT REQUIRED
S-1	5"	288'-1"	none
S-2	10"	288'-0"	Detail a
S-3	5"	288'-0"	none
S-4	9"	287'-6"	none
S-5	9"	288'-6"	none
S-6	10"	288'-5"	Detail a
S-7	8"	288'-2"	none

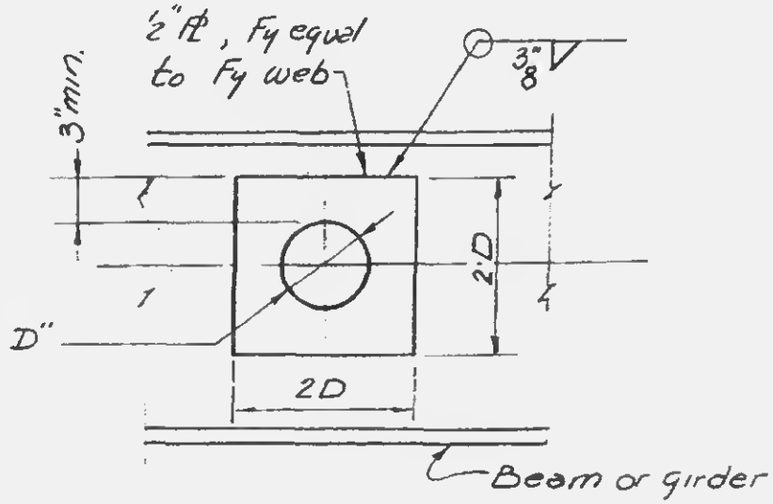

Detail a

For locations of holes, see Plans.

LICENSED PROFESSIONAL ENGINEER
LESLIE E. ROBERTSON
No. 34360
UNIVERSITY OF THE STATE OF NEW YORK

12-JK2-49