SKILLING - HELLE - CHRISTIANSEN - ROBERTSON — Structural & Civil Engineers

PROJECT: THE WORLD TRADE CENTER | TITLE: DETAIL OF PLATE GIRDER | DATE: 2-29-68

REVISIONS
4-5-68
6-28-68
1-3-69

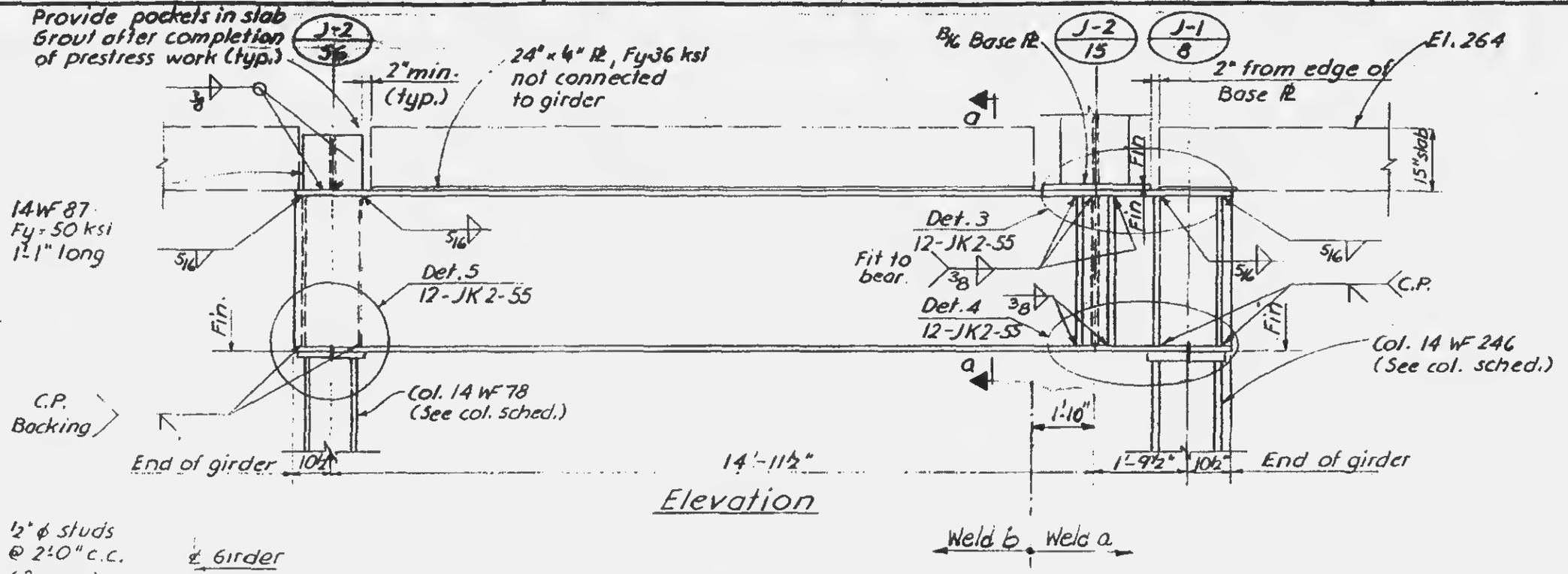

Elevation

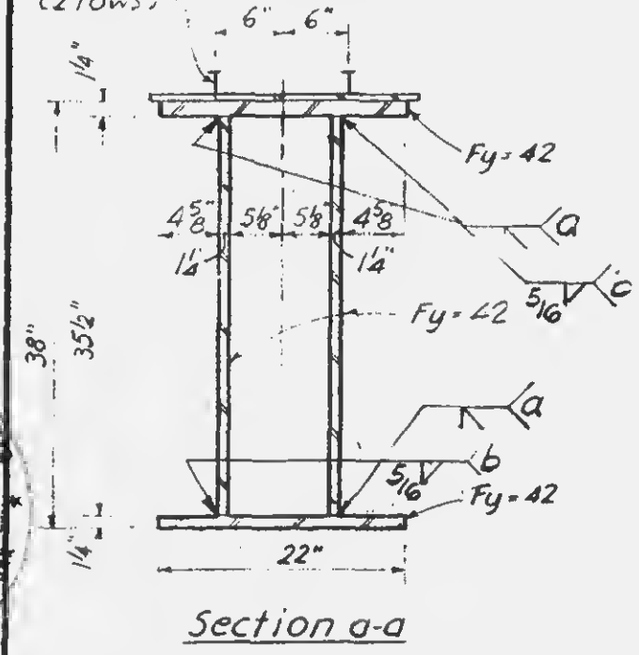

Section a-a

Note:
1. All welds to be E70XX.
2. All bolts to be A325 friction type.
3. Col. cap Pl detail similar to Det. 104 (10-JK2-7)

LICENSED PROFESSIONAL ENGINEER
LESLIE E. ROBERTSON
No. 34360
UNIVERSITY OF THE STATE OF NEW YORK

DRAWN
S.T.M.
REVIEWED
E.L.

12-JK2-54