SKILLING - HELLE - CHRISTIANSEN - ROBERTSON — Structural & Civil Engineers

PROJECT: THE WORLD TRADE CENTER | TITLE: DETAILS OF PLATE GIRDER | DATE: 5-1-68

EVISIONS
6-7-68
7-19-68
1-3-69

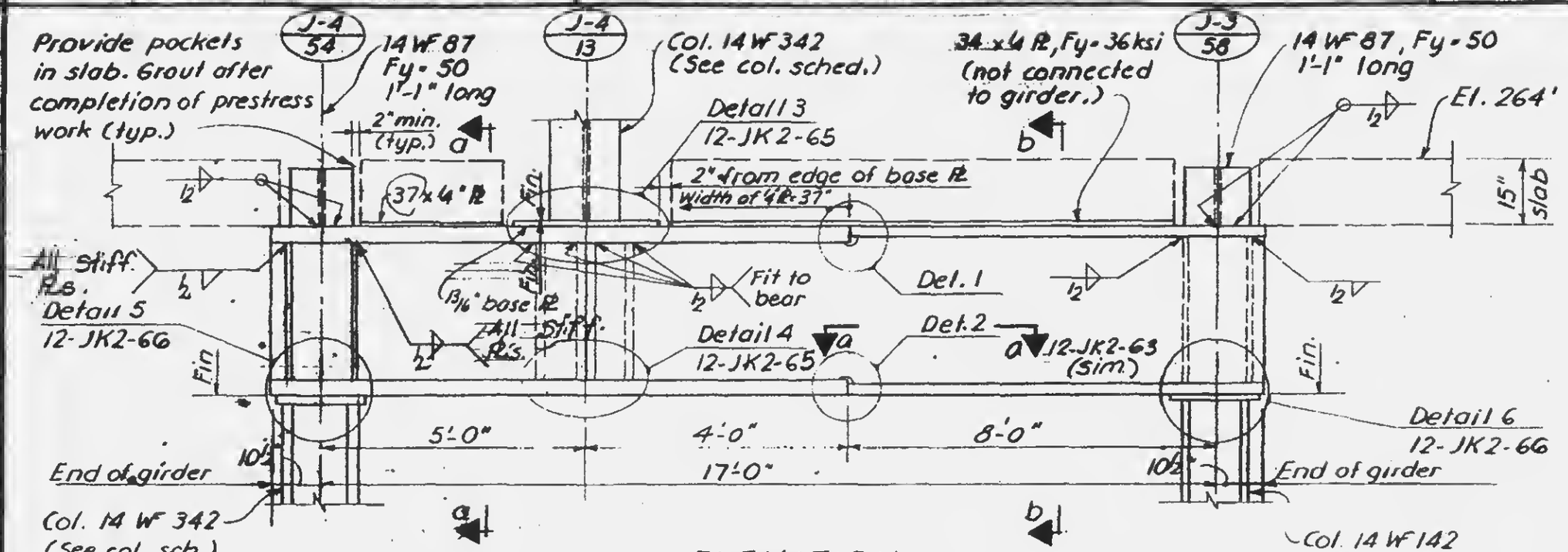

Note:
1. All welds to be E 70 xx
2. All bolts to be A-325 friction type.
3. Col. cap PL Detail similar to Detail 104 (10-JK2-7)

LICENSED PROFESSIONAL ENGINEER — LESLIE E. ROBERTSON — No. 24360 — UNIVERSITY OF THE STATE OF NEW YORK

DRAWN S.T.M.
REVIEWED E.L.

12-JK2-64