SKILLING - HELLE - CHRISTIANSEN - ROBERTSON — Structural & Civil Engineers

PROJECT: THE WORLD TRADE CENTER | TITLE: DETAIL OF PLATE GIRDER | DATE: 5-1-68

REVISIONS
7-19-68
1-3-69

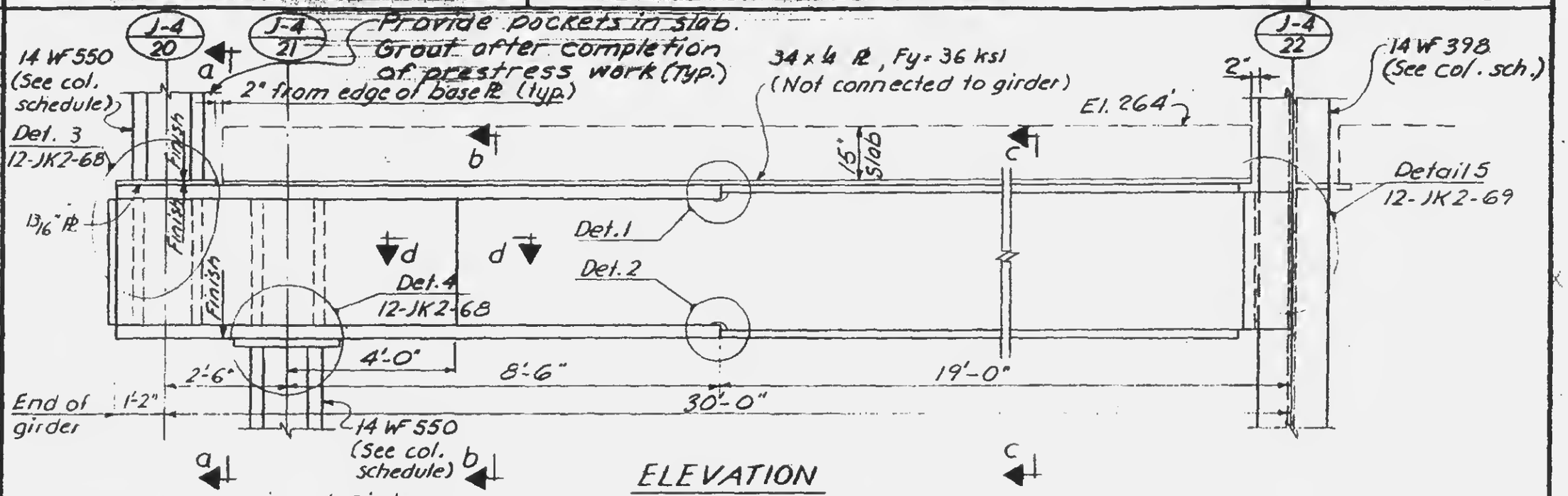

ELEVATION

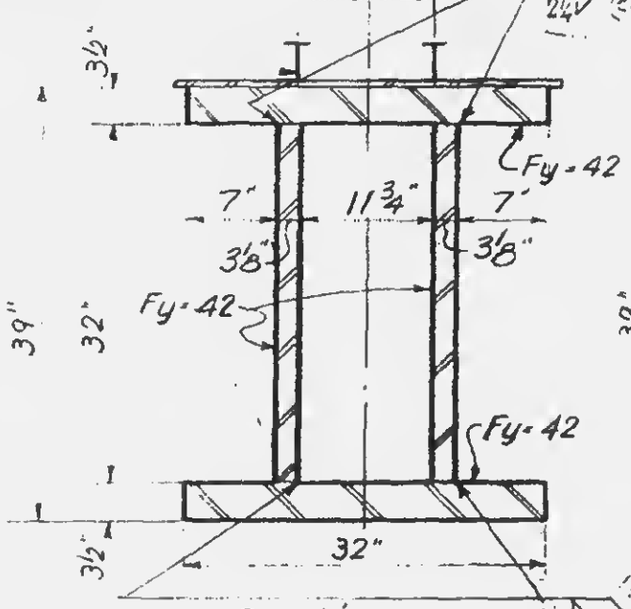

Section a-a

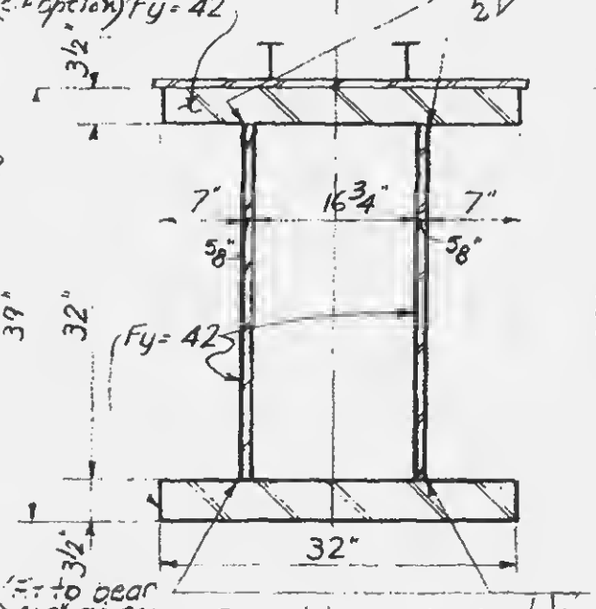

Section b-b

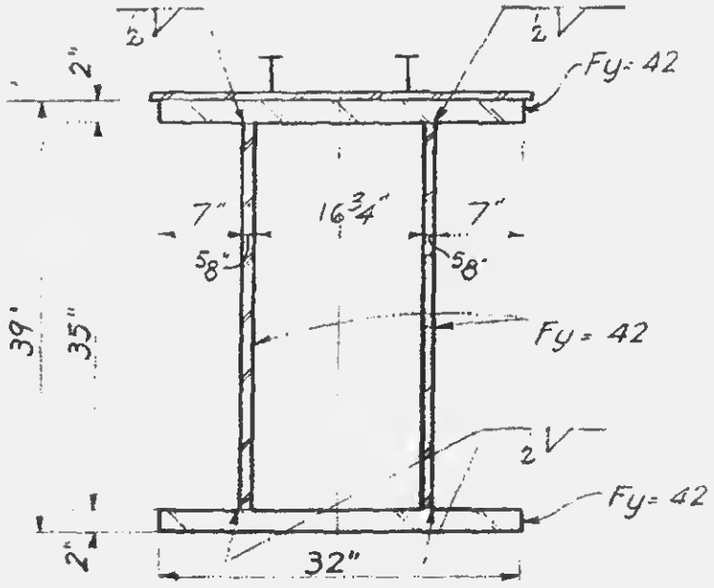

Section c-c

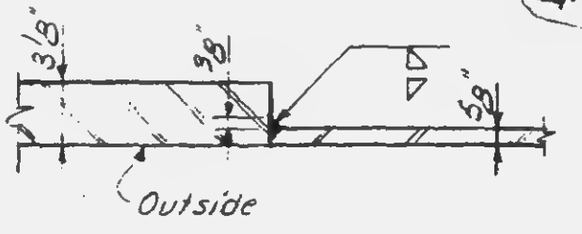

Section d-d

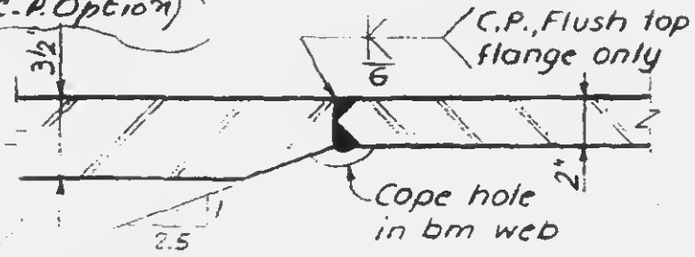

Detail 1 (as shown) - Detail 2 (reflected)

Note:
1. All welds to be E70xx.
2. All bolts to be A 325 friction type. Except as noted.
3. Col. cap Pl Detail similar to Detail 104 (10-JK2-7)

LICENSED PROFESSIONAL ENGINEER — LESLIE E. ROBERTSON — No. 54360 — STATE OF NEW YORK

DRAWN S.T.M.
REVIEWED E.L.

12-JK2-67