SKILLING - HELLE - CHRISTIANSEN - ROBERTSON Structural & Civil Engineers

PROJECT THE WORLD TRADE CENTER | TITLE GIRDER DETAILS | DATE 5-1-68

REVISIONS
6-7-68
7-19-68

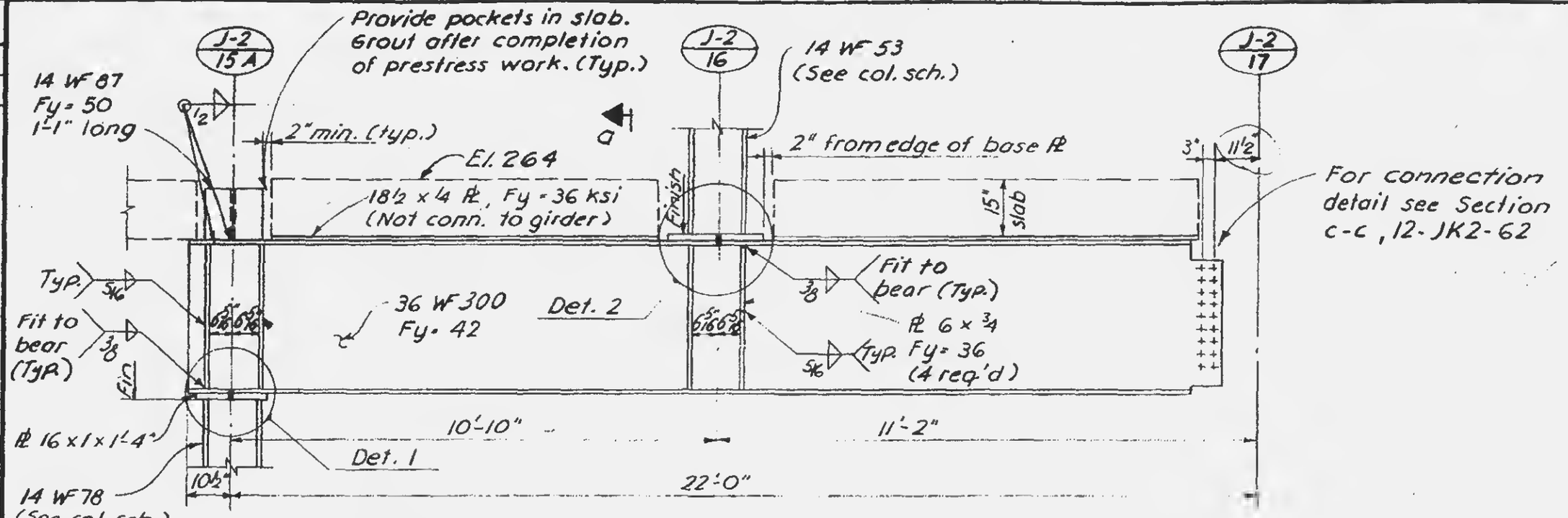

ELEVATION

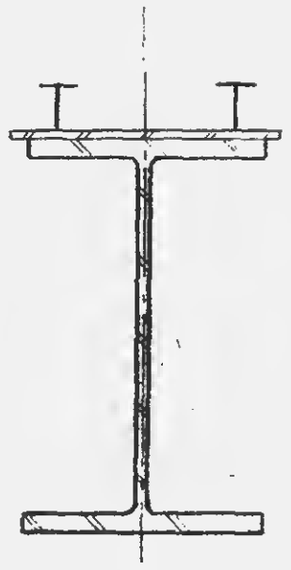

Section a-a

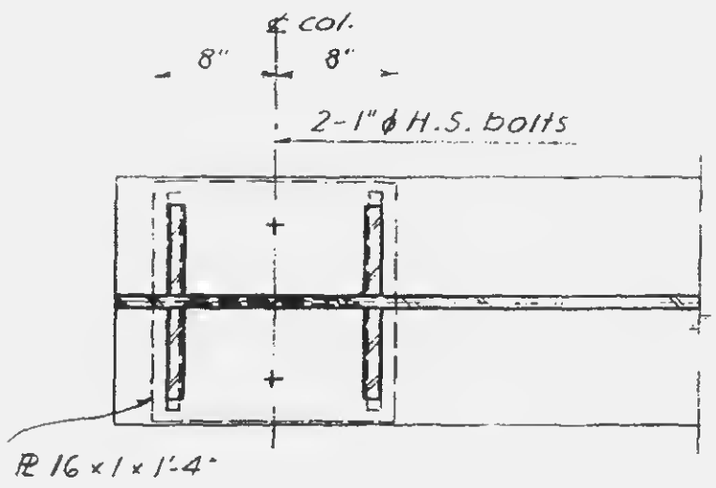

Detail 1

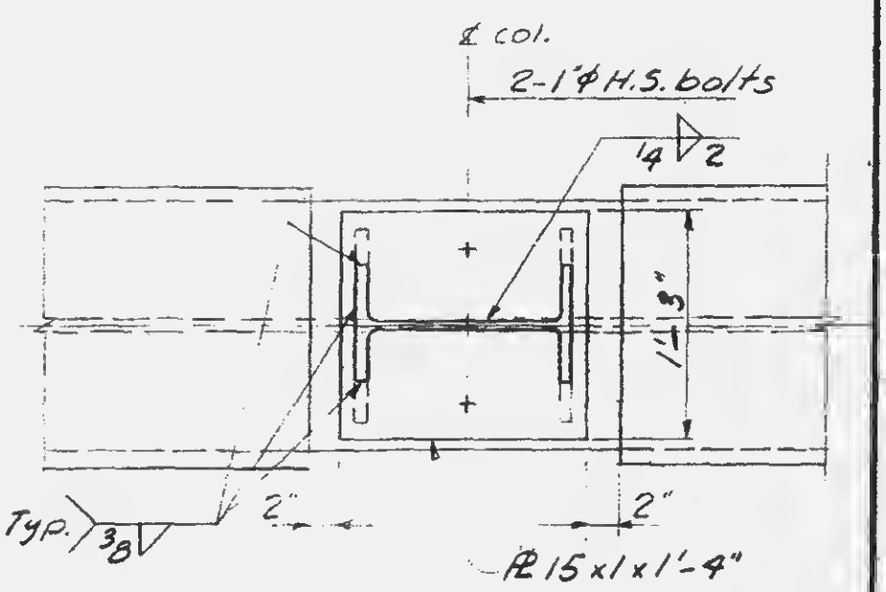

Detail 2

Note:
1. All welds to be E 70 xx
2. All bolts to be A325 friction type.
3. Col. cap PL Detail similar to Detail 104 (10-JK2-7)

LICENSED PROFESSIONAL ENGINEER
LESLIE E. ROBERTSON
No. 34360
UNIVERSITY OF THE STATE OF NEW YORK

12-JK2-70