SKILLING - HELLE - CHRISTIANSEN - ROBERTSON Structural & Civil Engineers

PROJECT THE WORLD TRADE CENTER | TITLE DETAIL OF PLATE GIRDER | DATE 5-1-68

REVISIONS

6-7-68

7-19-68

1-3-69

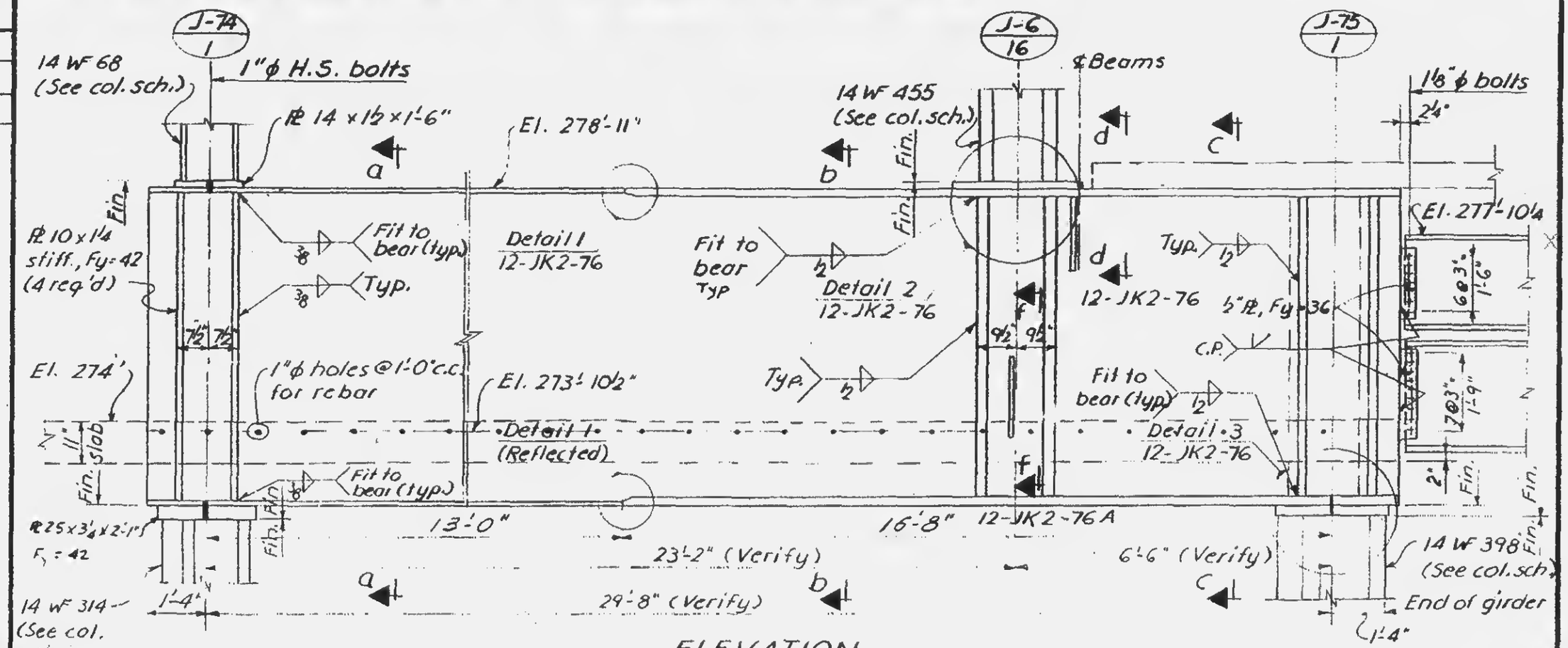


ELEVATION

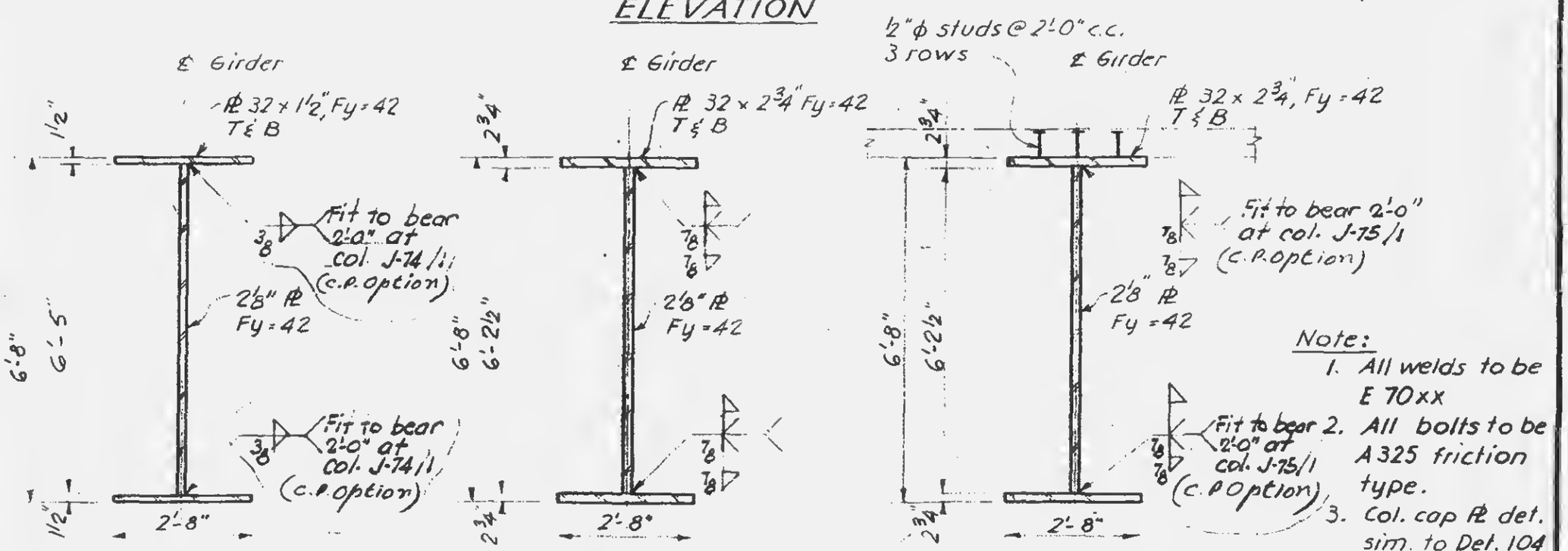


Section a-a

Section b-b

Section c-c

Note:
1. All welds to be E 70xx
2. All bolts to be A325 friction type.
3. Col. cap PL det. sim. to Det. 104 (10-JK2-7)

12-JK2-75

LICENSED PROFESSIONAL ENGINEER LESLIE E. ROBERTSON No. 34360 UNIVERSITY OF THE STATE OF NEW YORK

DRAWN S.T.M.

REVIEWED E.L.