SKILLING - HELLE - CHRISTIANSEN - ROBERTSON Structural & Civil Engineers

PROJECT THE WORLD TRADE CENTER | TITLE DETAIL OF PLATE GIRDER | DATE 5-1-68

REVISIONS

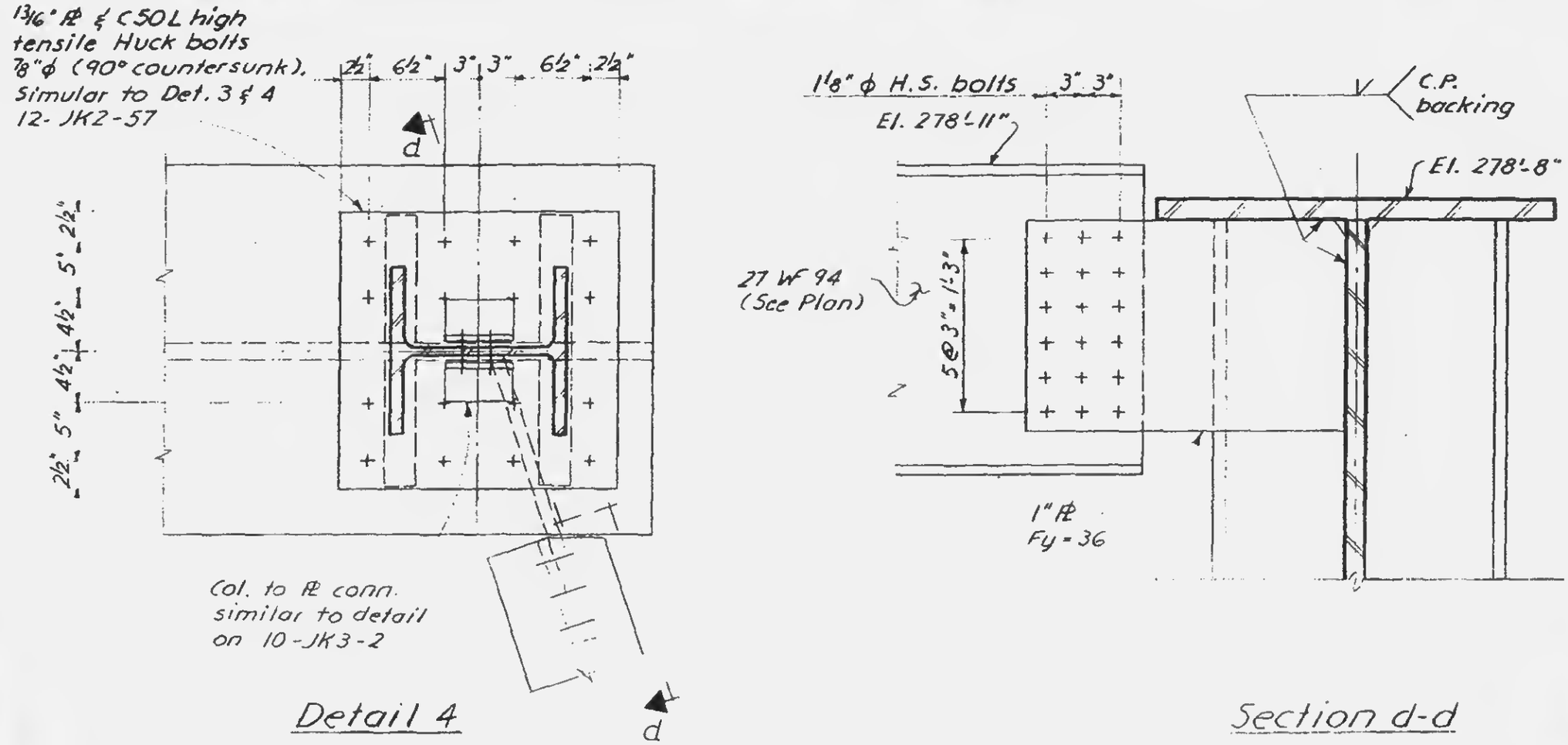

Detail 4

Section d-d



12-JK2-78A