SKILLING - HELLE - CHRISTIANSEN - ROBERTSON Structural & Civil Engineers

PROJECT THE WORLD TRADE CENTER | TITLE DETAIL OF PLATE GIRDER | DATE 6-7-68

REVISIONS

7-19-68

12-3-68

2-11-70

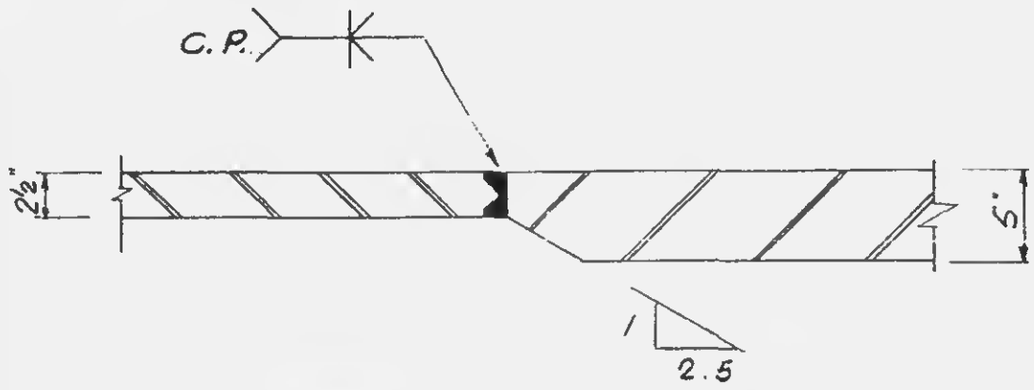

Section c-c (as shown)

Section d-d (opp hand)

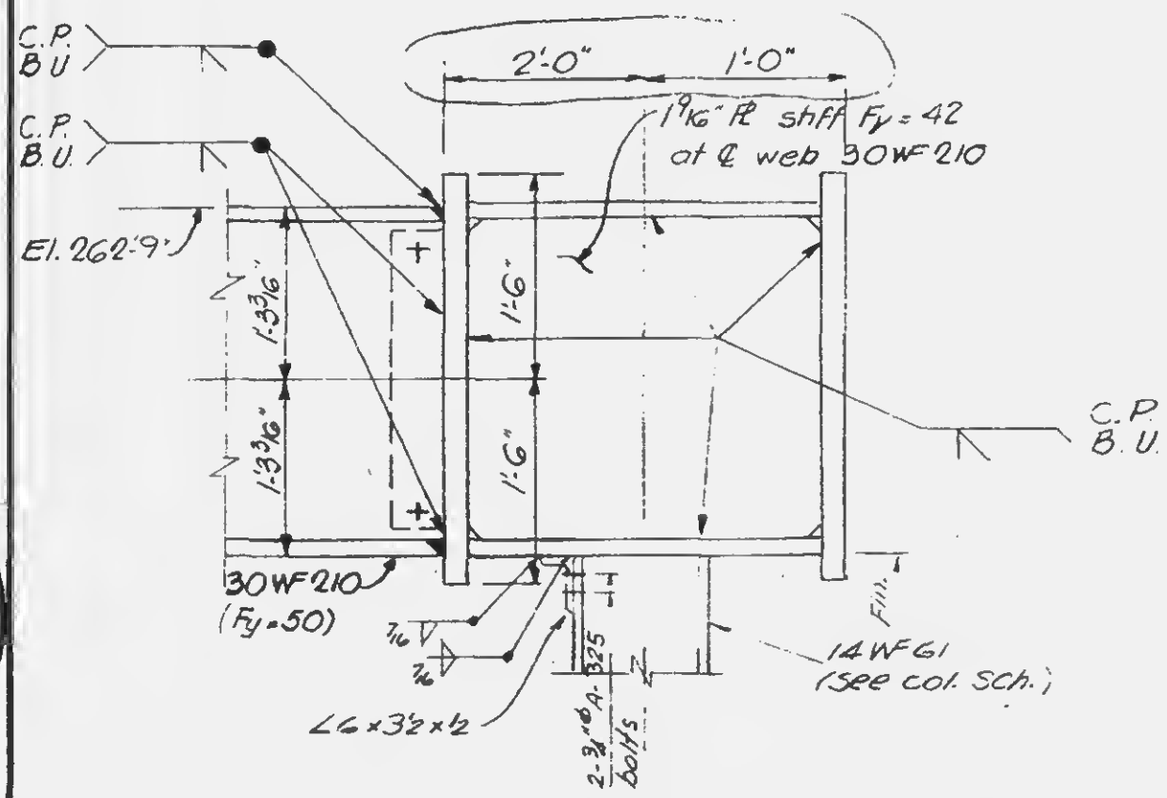

Section e-e (as shown)

Section f-f (opp hand)

Note:
See also, Dwg. SK-4-1-284 (12-22-69)
(Change No. 533.058)

LICENSED PROFESSIONAL ENGINEER
LESLIE E. ROBERTSON
No. 34360
UNIVERSITY OF THE STATE OF NEW YORK

DRAWN
S.C.
REVIEWED
E.L.

12-JK2-86