SKILLING · HELLE · CHRISTIANSEN · ROBERTSON Structural & Civil Engineers

PROJECT THE WORLD TRADE CENTER | TITLE DETAIL OF PLATE GIRDER | DATE 6-11-68

SIONS

7-19-68

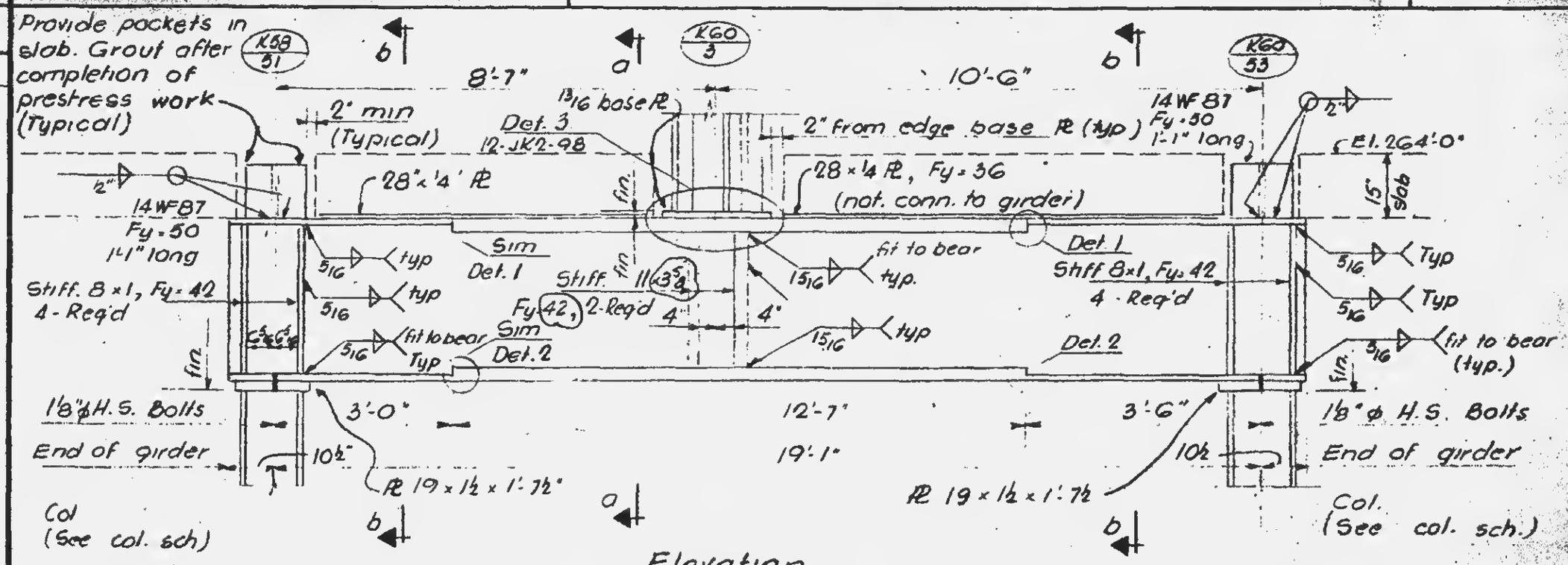

Elevation

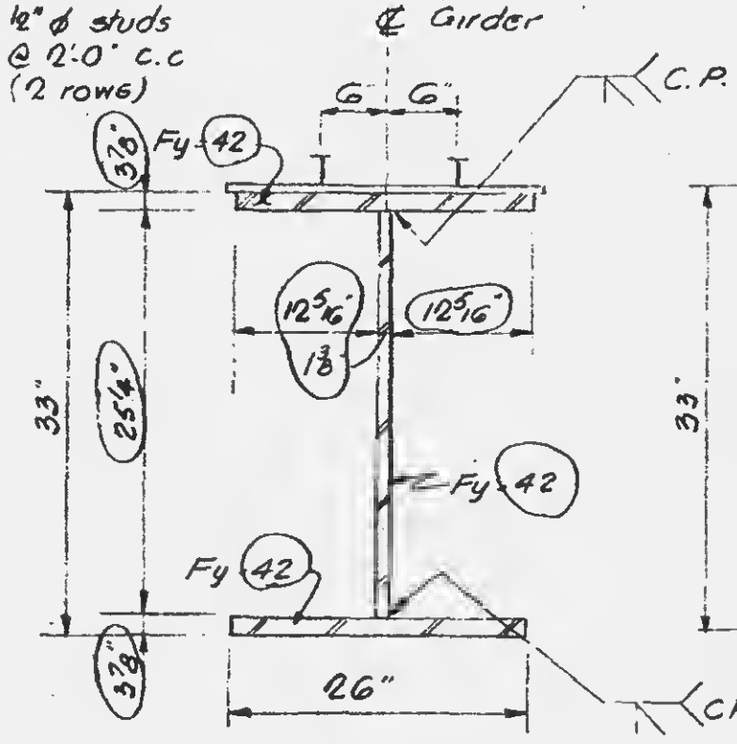

Section a-a

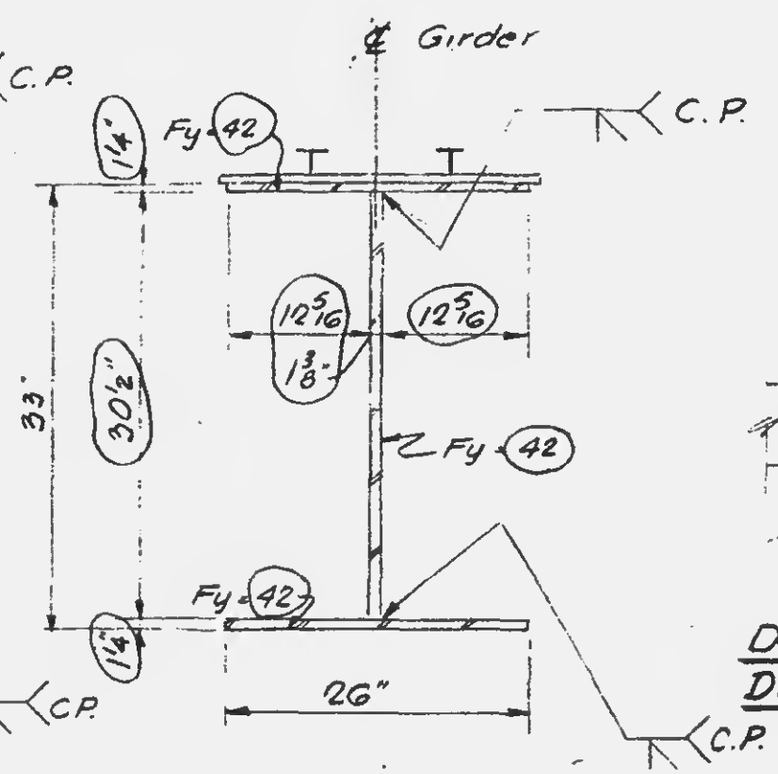

Section b-b

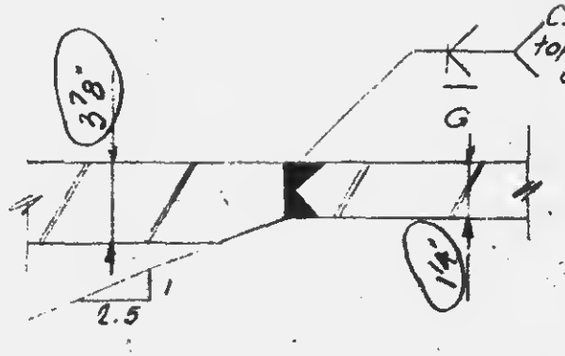

Detail 1 (as shown)
Detail 2 (reflected)

Notes

1. All welds to be E 70 xx
2. All bolts to be A 325 friction type, unless noted
3. Col. cap ℄ Detail similar to Detail 104 (10-JK2-7)

12-JK2-97

STATE OF NEW YORK No. 34360