SKILLING - HELLE - CHRISTIANSEN - ROBERTSON Structural & Civil Engineers

PROJECT THE WORLD TRADE CENTER | TITLE GIRDER BRACING DETAILS | DATE 5-1-68

REVISIONS

7-19-68

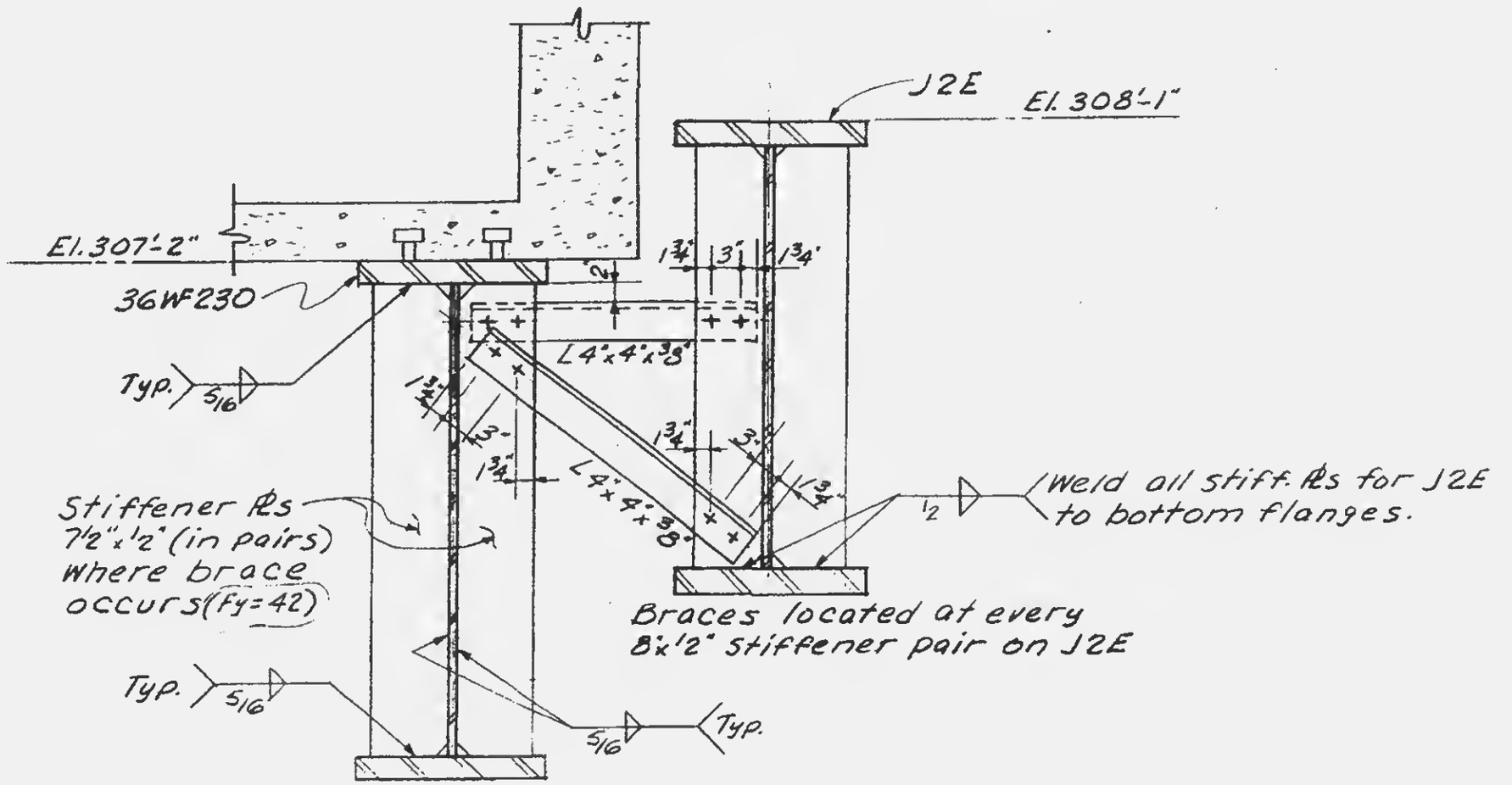

Note:
1. Bolts are 1"ϕ A325 H.S. friction type connections.



12-JK2-106