SKILLING - HELLE - CHRISTIANSEN -- ROBERTSON — Structural & Civil Engineers

PROJECT THE WORLD TRADE CENTER | TITLE GIRDER CONNECTION DETAIL | DATE 5-1-68

REVISIONS
7-19-68

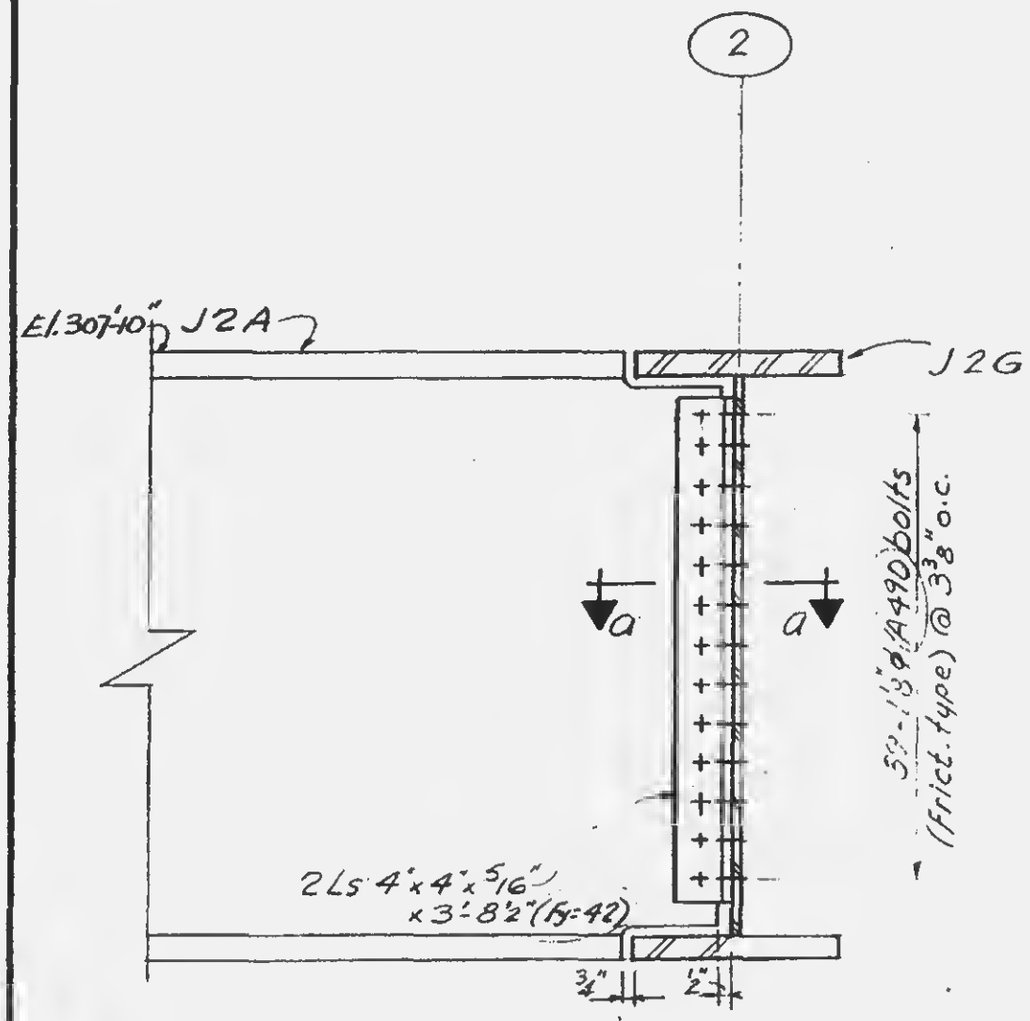

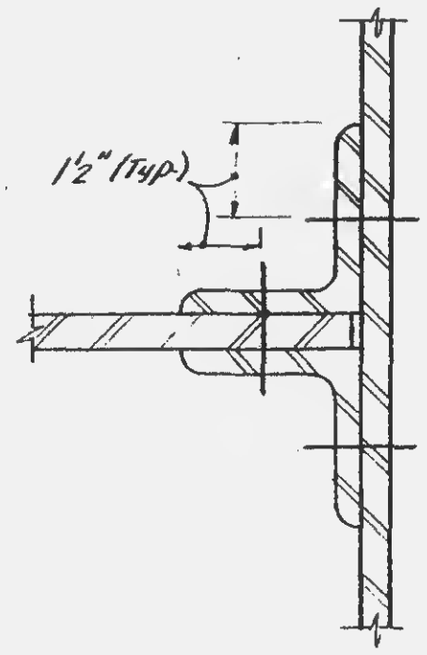

Section a-a

LICENSED PROFESSIONAL ENGINEER
LESLIE E. ROBERTSON
No. 34360
UNIVERSITY OF THE STATE OF NEW YORK

12-JK2-114