SKILLING - HELLE - CHRISTIANSEN - ROBERTSON Structural & Civil Engineers

PROJECT THE WORLD TRADE CENTER | TITLE GIRDER CONNECTION DETAIL | DATE 6-7-68

REVISIONS

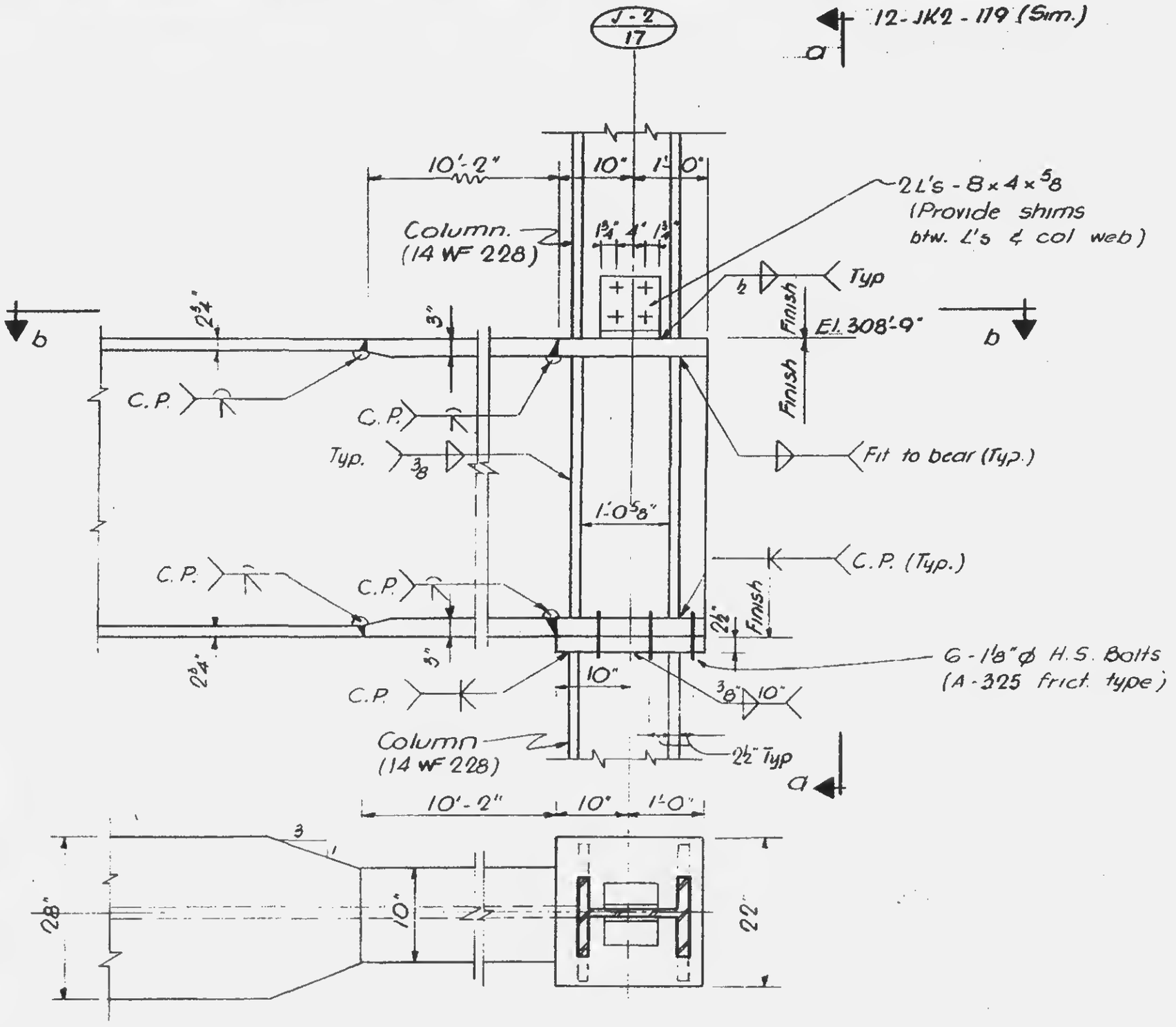

Section b-b

12-JK2-119A