SKILLING, HELLE, CHRISTIANSEN, ROBERTSON · Structural & Civil Engineers

PROJECT THE WORLD TRADE CENTER | TITLE GIRDER CONNECTION DETAIL | DATE 3-17-69

REVISIONS

4-18-69

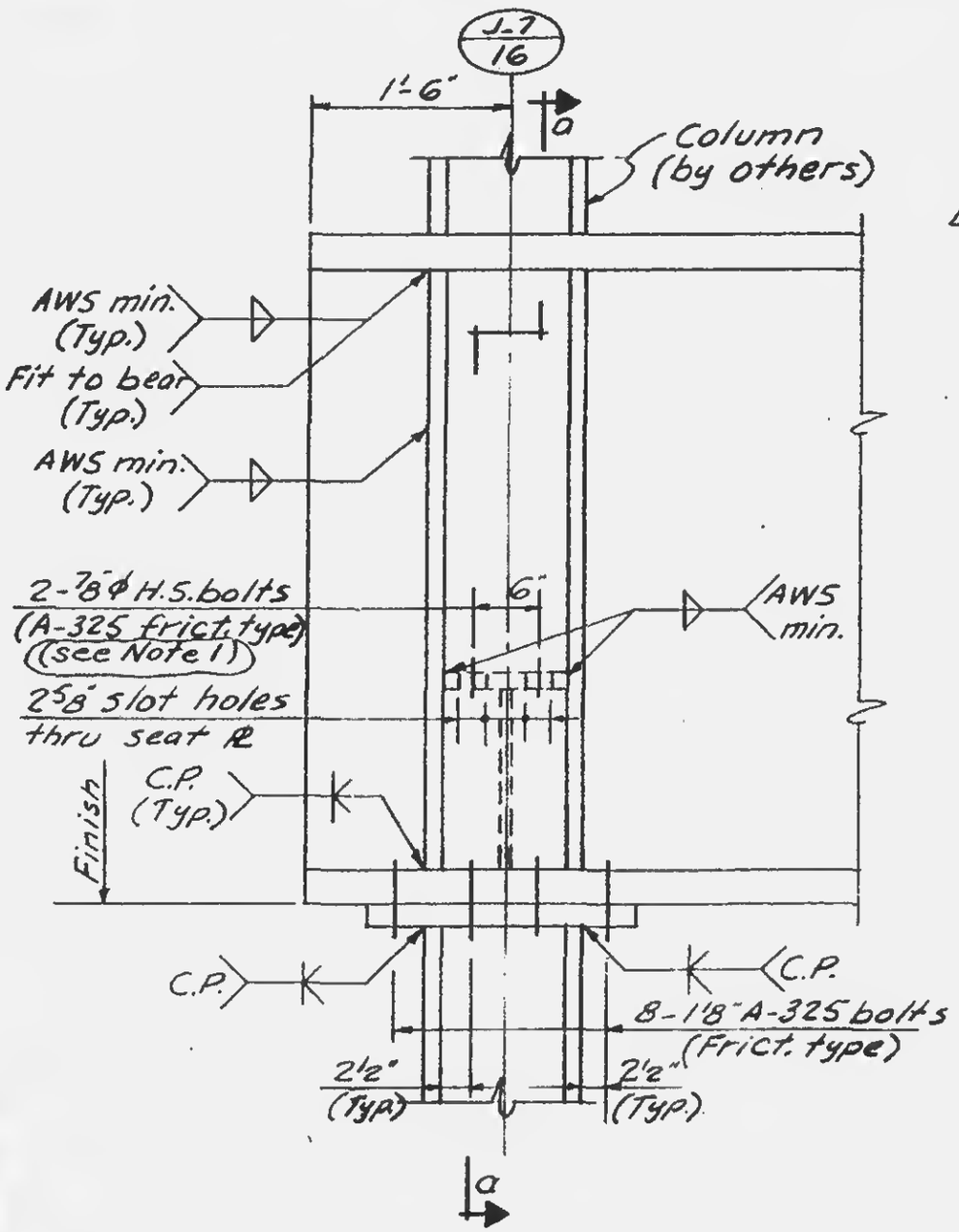

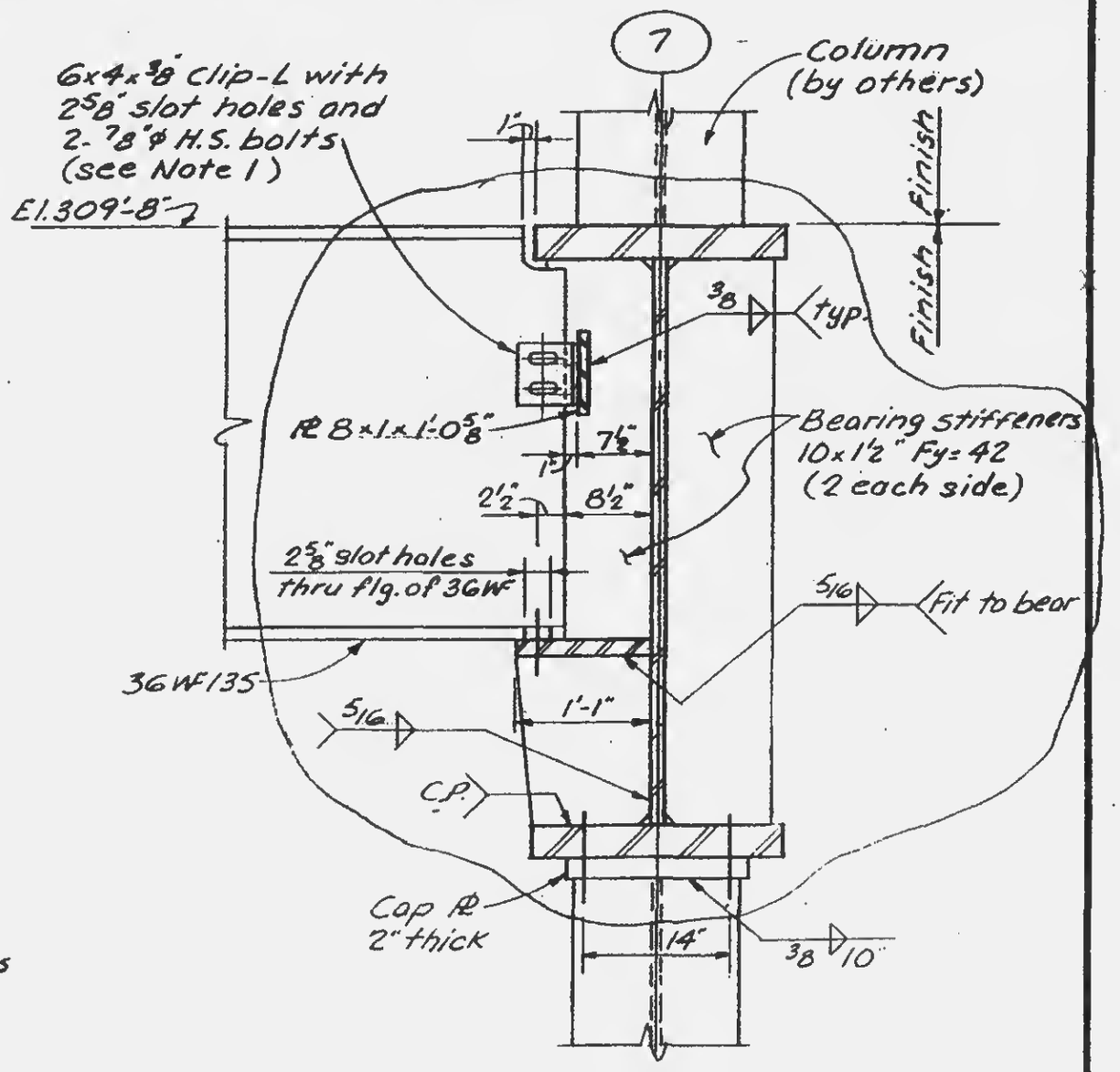

Section a-a

Notes:

1. Tighten all bolts only after pouring concrete to the strip of Const. Jt. as shown on plan.

LICENSED PROFESSIONAL ENGINEER
LESLIE E. ROBERTSON
No. 34360
UNIVERSITY OF THE STATE OF NEW YORK

DESIGNED

DRAWN
A.L. FRANQUI

REVIEWED
E.L.

12-JK2-121A