KILLING - HELLE - CHRISTIANSEN - ROBERTSON Structural & Civil Engineers

PROJECT	TITLE	DATE
THE WORLD TRADE CENTER	GIRDER CONNECTION DETAIL	5-1-68

REVISIONS

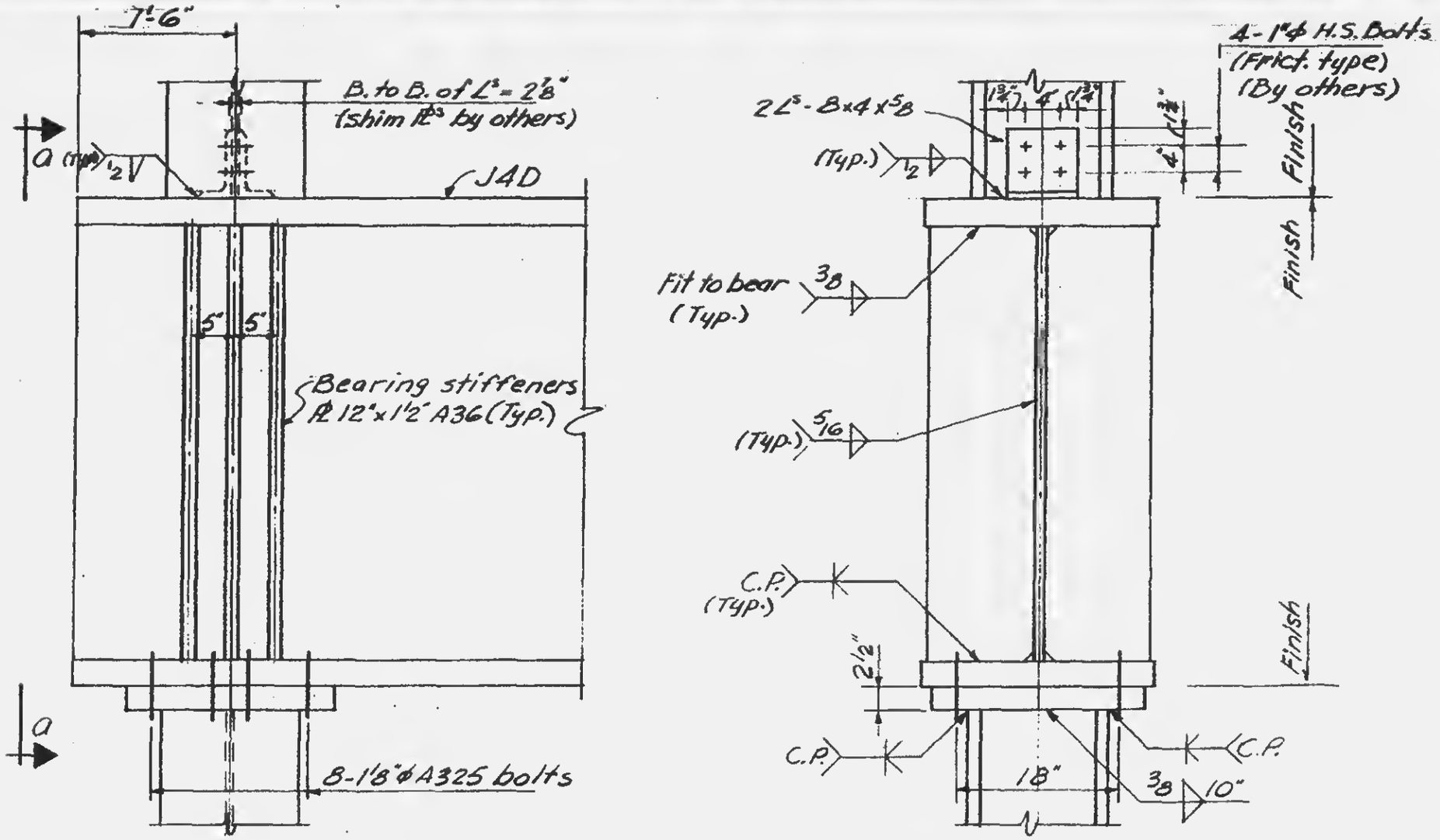

Section a-a

12-JK2-126