SKILLING, HELLE, CHRISTIANSEN, ROBERTSON — Structural & Civil Engineers

PROJECT: THE WORLD TRADE CENTER

TITLE: GIRDER CONNECTION DETAIL

DATE: 1-20-69

REVISIONS

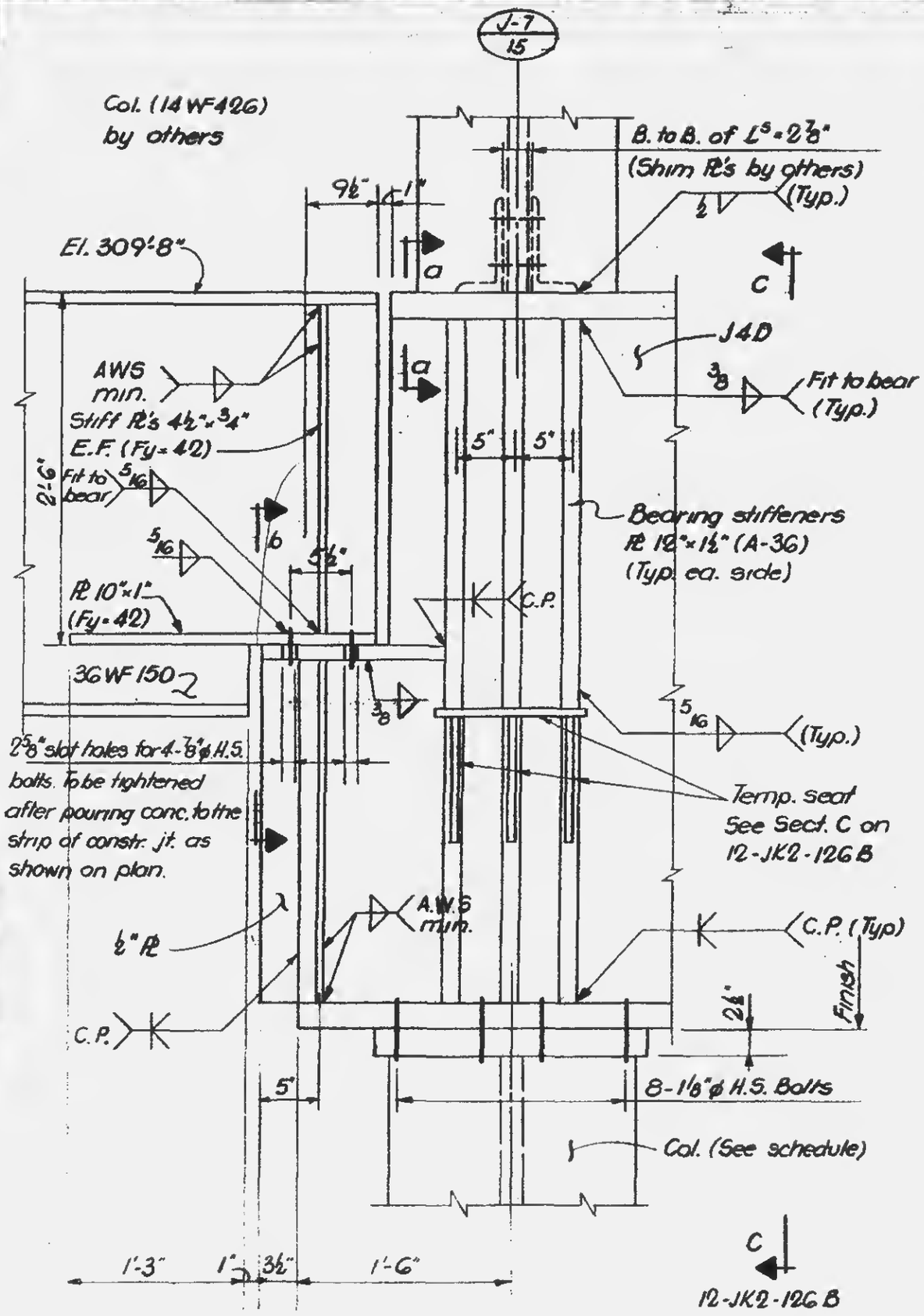

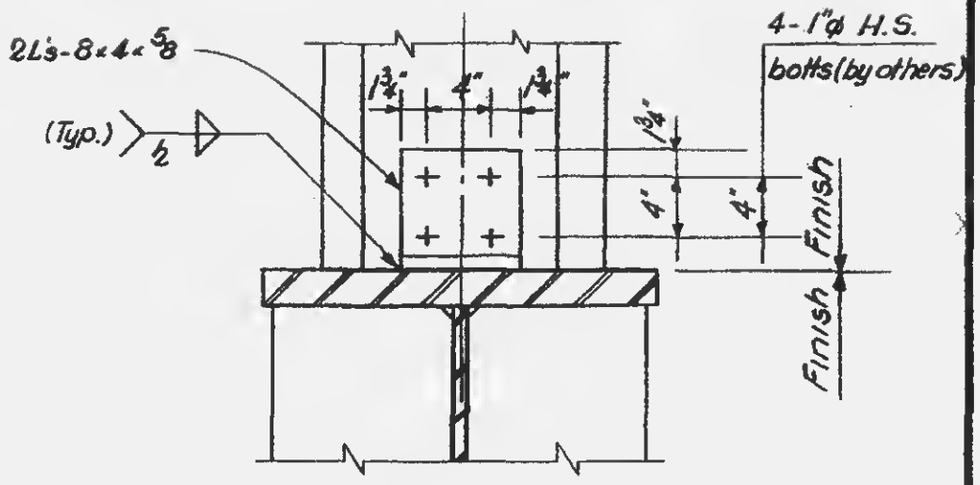

Section a-a

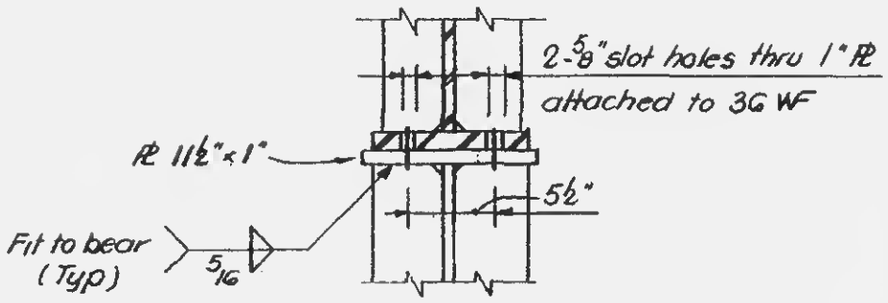

Section b-b

Notes:

1. All H.S. bolts to be A-325 friction type, except as noted
2. All welds to be E 70xx.
3. Provide washers 2½ x 5/8 (square or round) with fy = 50 ksi for all bolts over slot holes.

LICENSED PROFESSIONAL ENGINEER — LESLIE E. ROBERTSON — No. 34360 — UNIVERSITY OF THE STATE OF NEW YORK

DESIGNED

DRAWN: G.T.H.

REVIEWED: E.L.

12-JK2-126A