SKILLING, HELLE, CHRISTIANSEN, ROBERTSON — STRUCTURAL ENGINEERS

PROJECT: THE WORLD TRADE CENTER | TITLE: GIRDER CONNECTION DETAIL | DATE: 3-1-68

REVISIONS
6-28-68
7-19-68

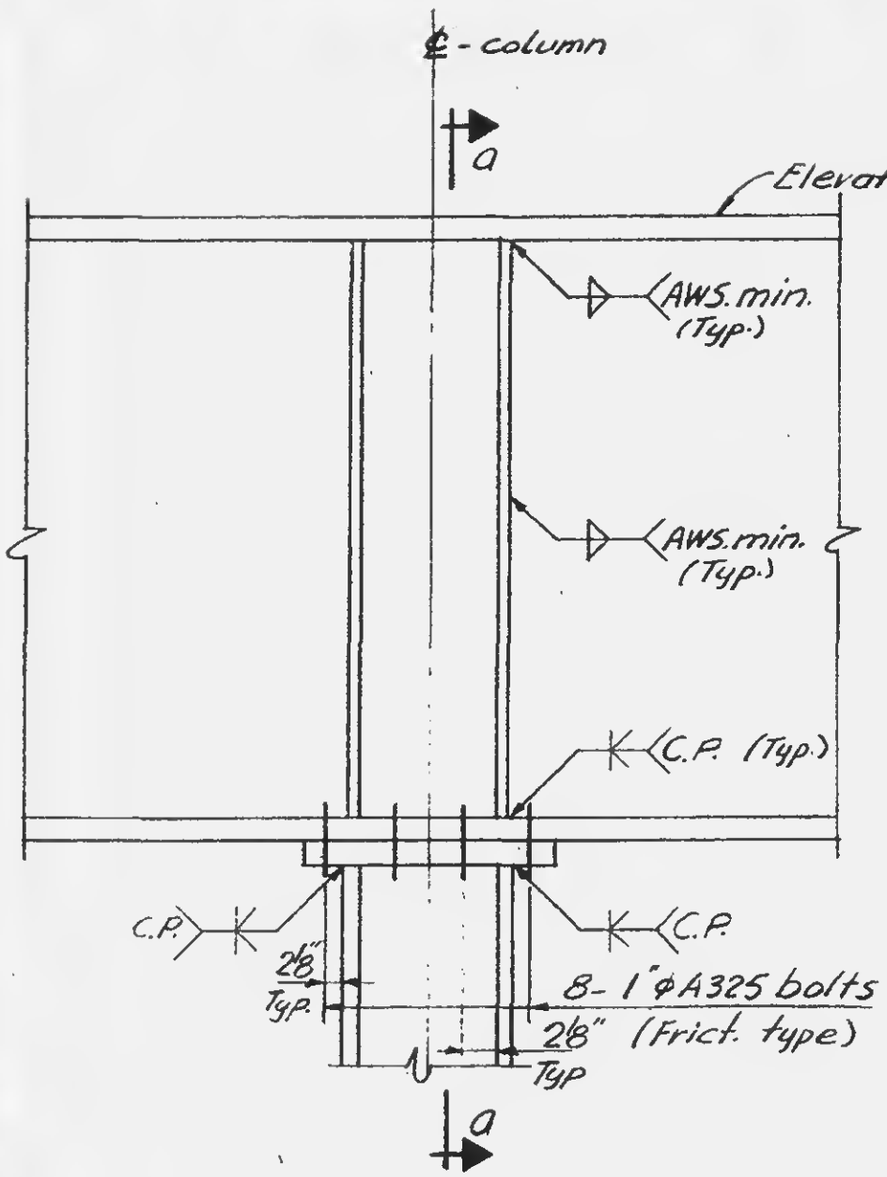

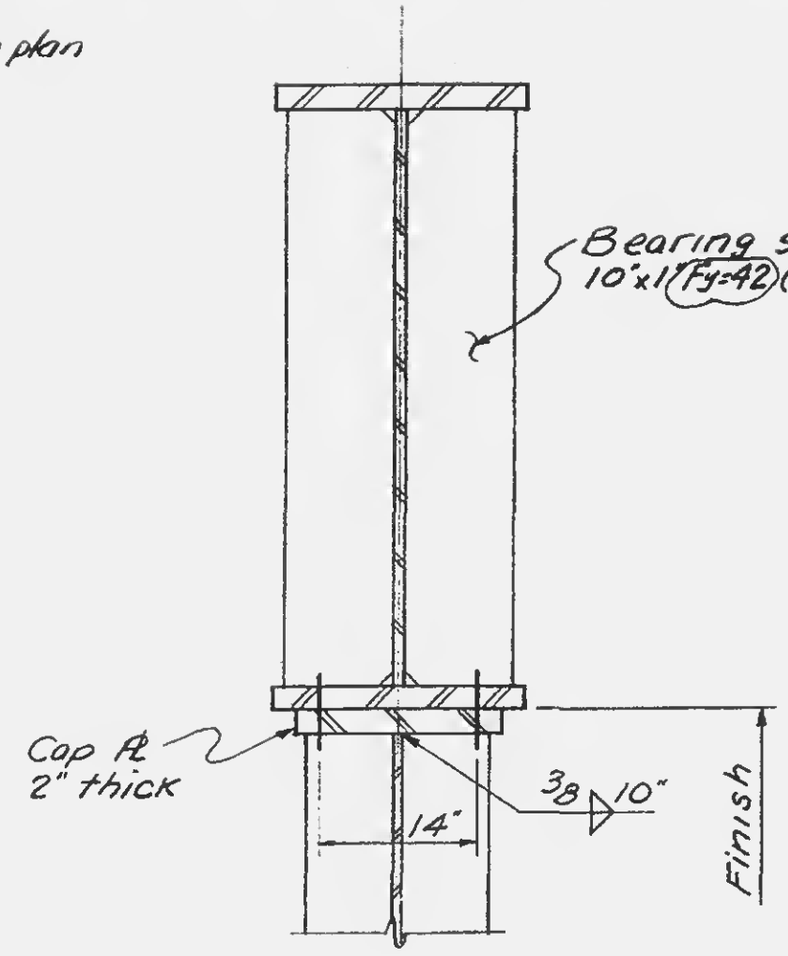

Section a-a

LICENSED PROFESSIONAL ENGINEER
LESLIE E. ROBERTSON
No. 34360
UNIVERSITY OF THE STATE OF NEW YORK

12-JK2-129