SKILLING - HELLE - CHRISTIANSEN - ROBERTSON — Structural & Civil Engineers

PROJECT THE WORLD TRADE CENTER | TITLE GIRDER CONNECTION DETAIL | DATE 5-1-68

REVISIONS

6-7-68

6-28-68

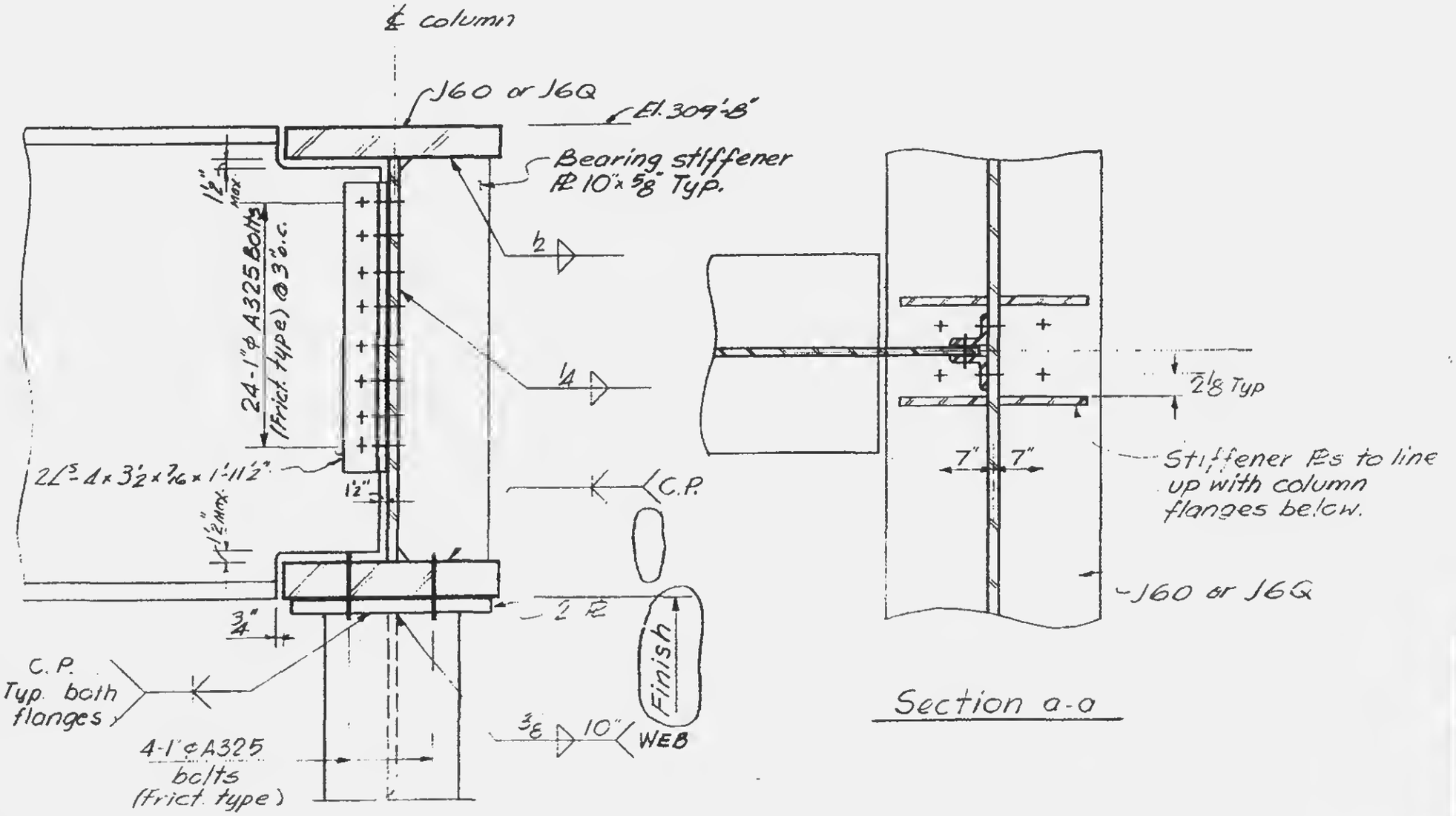

Section a-a

Note: Some stiffeners omitted from elevation for clarity. See Sect. a-a

LESLIE E. ROBERTSON PROFESSIONAL ENGINEER No. 34360 UNIVERSITY OF THE STATE OF NEW YORK

12-JAN-130