SKILLING - HELLE - CHRISTIANSEN - ROBERTSON Structural & Civil Engineers

PROJECT THE WORLD TRADE CENTER | TITLE GIRDER J2I CONNECTION DETAIL | DATE 6-7-68

REVISIONS

7-19-68

1-8-69

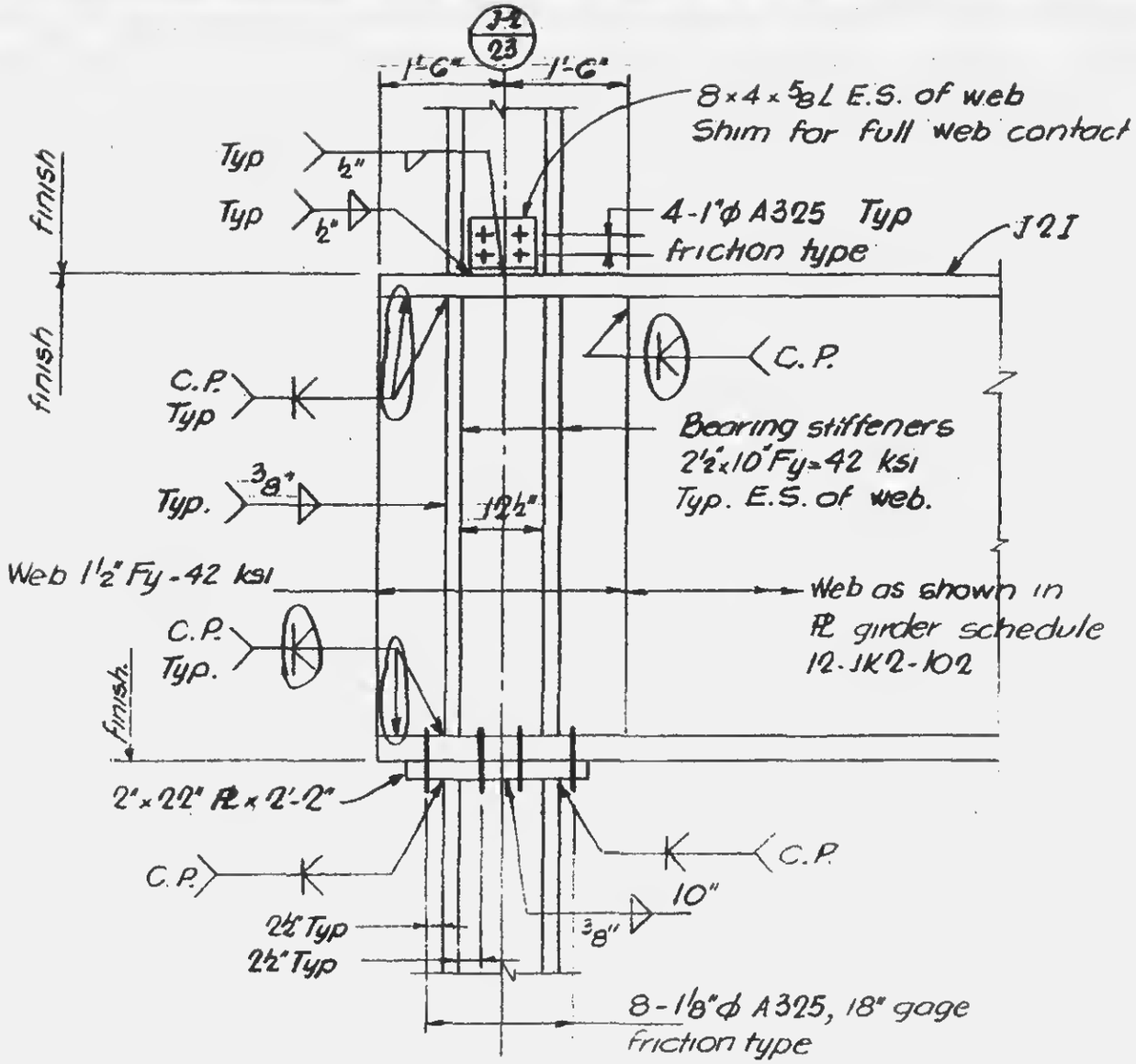

Ref. dwgs - 12-JK2-102, SJ-75

LICENSED PROFESSIONAL ENGINEER
LESLIE E. ROBERTSON
No. 34360
UNIVERSITY OF THE STATE OF NEW YORK

DRAWN
A.F.

REVIEWED
E.L.

12-JK2-137