SKILLING - HELLE - CHRISTIANSEN - ROBERTSON Structural Civil Engineers

PROJECT THE WORLD TRADE CENTER | TITLE GIRDER J40 CONNECTION DETAIL | DATE 6-7-68

REVISIONS

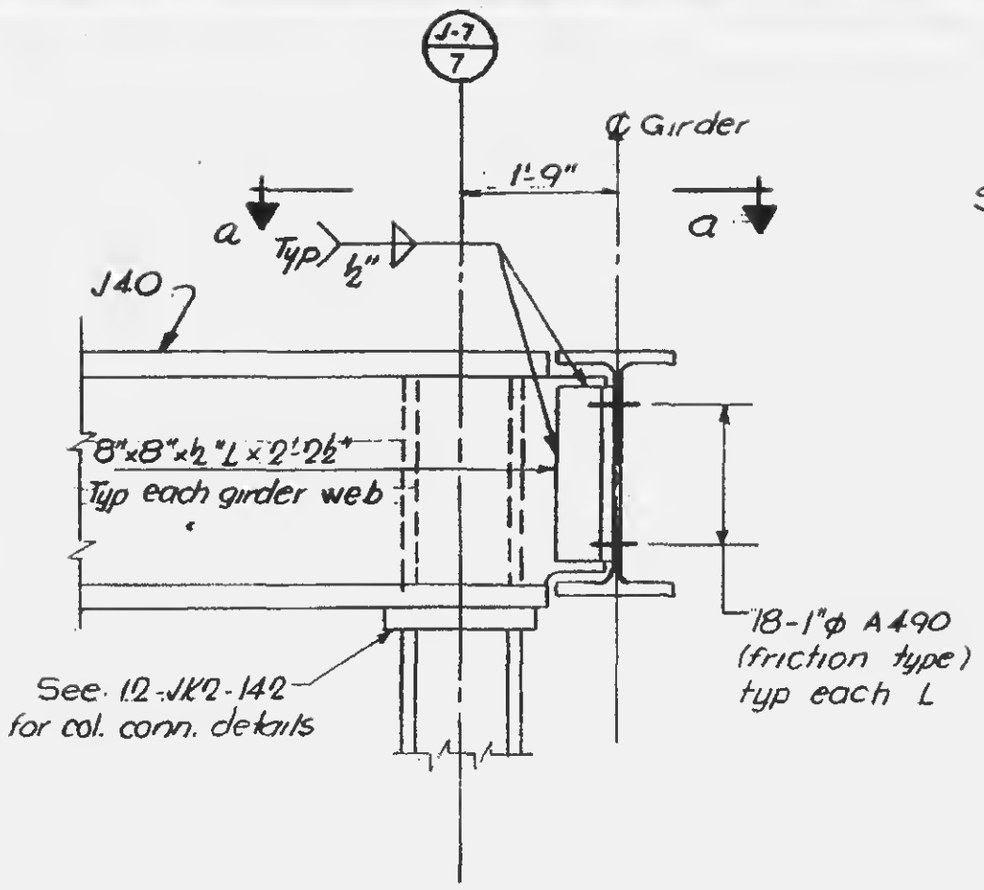

Elevation Section

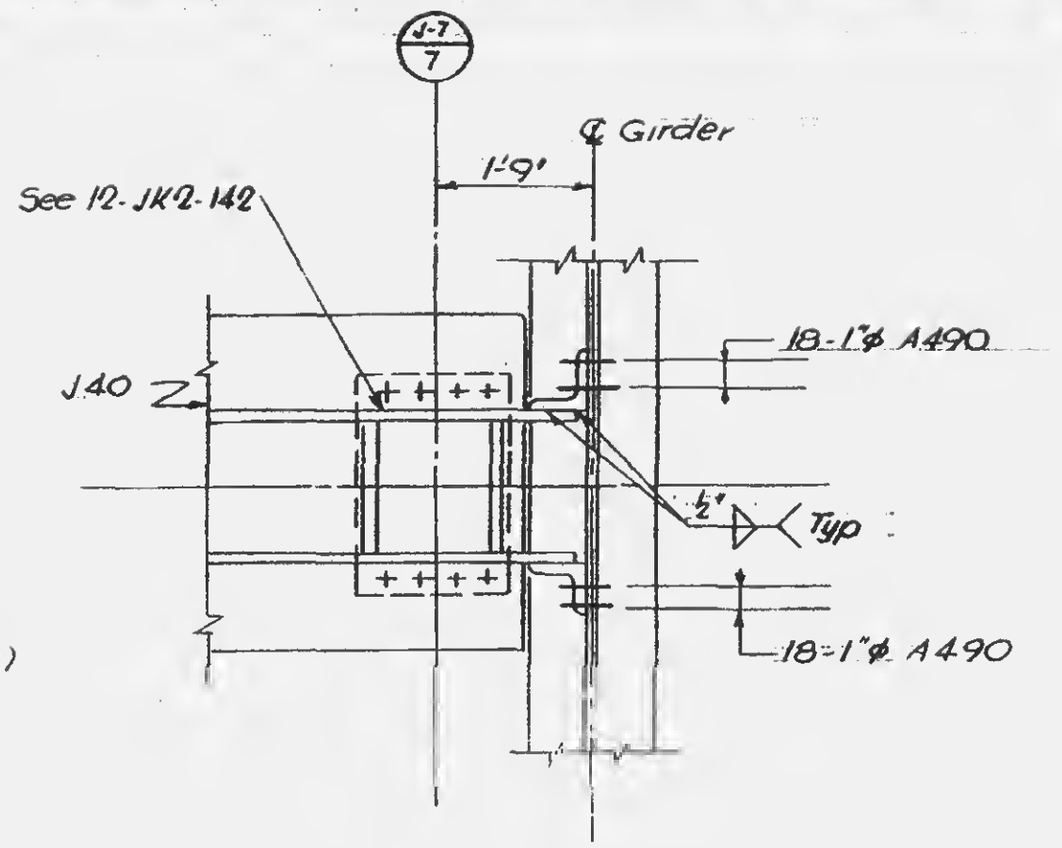

Plan - Section a-a

Ref. dwgs: 12-JK2-142, SJ-76

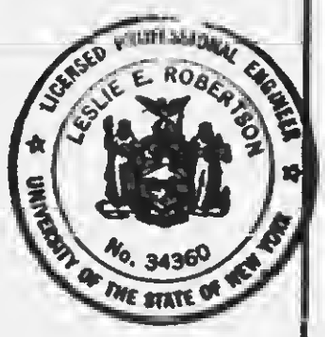

12-JK2-143