SKILLING HELLE CHRISTIANSEN ROBERTSON

PROJECT THE WORLD TRADE CENTER | TITLE TEMPORARY STRUCTURE | DATE 10-12-68

REVISIONS

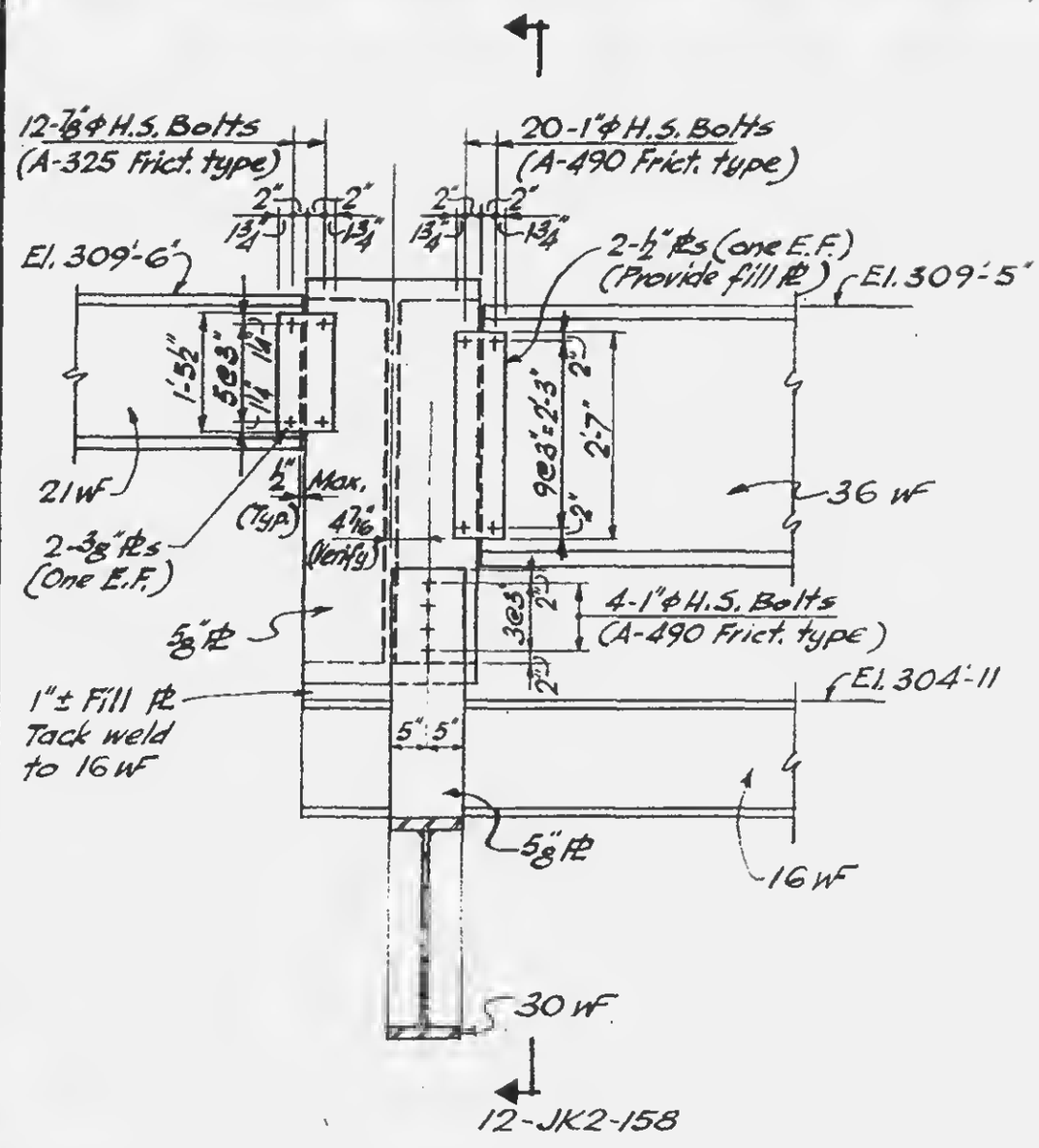

Section a-a

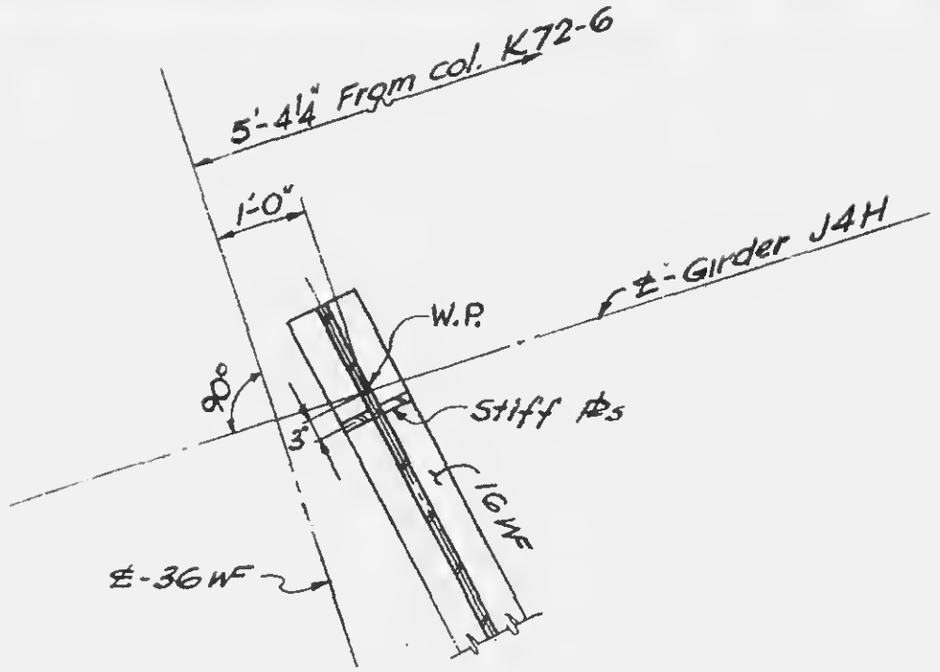

Section b-b

Notes:
1. All ϕs to have Fy=42 KSI Except as noted
2. All welds to be E70XX

DESIGNED

DRAWN

REVIEWED

12-JK2-159