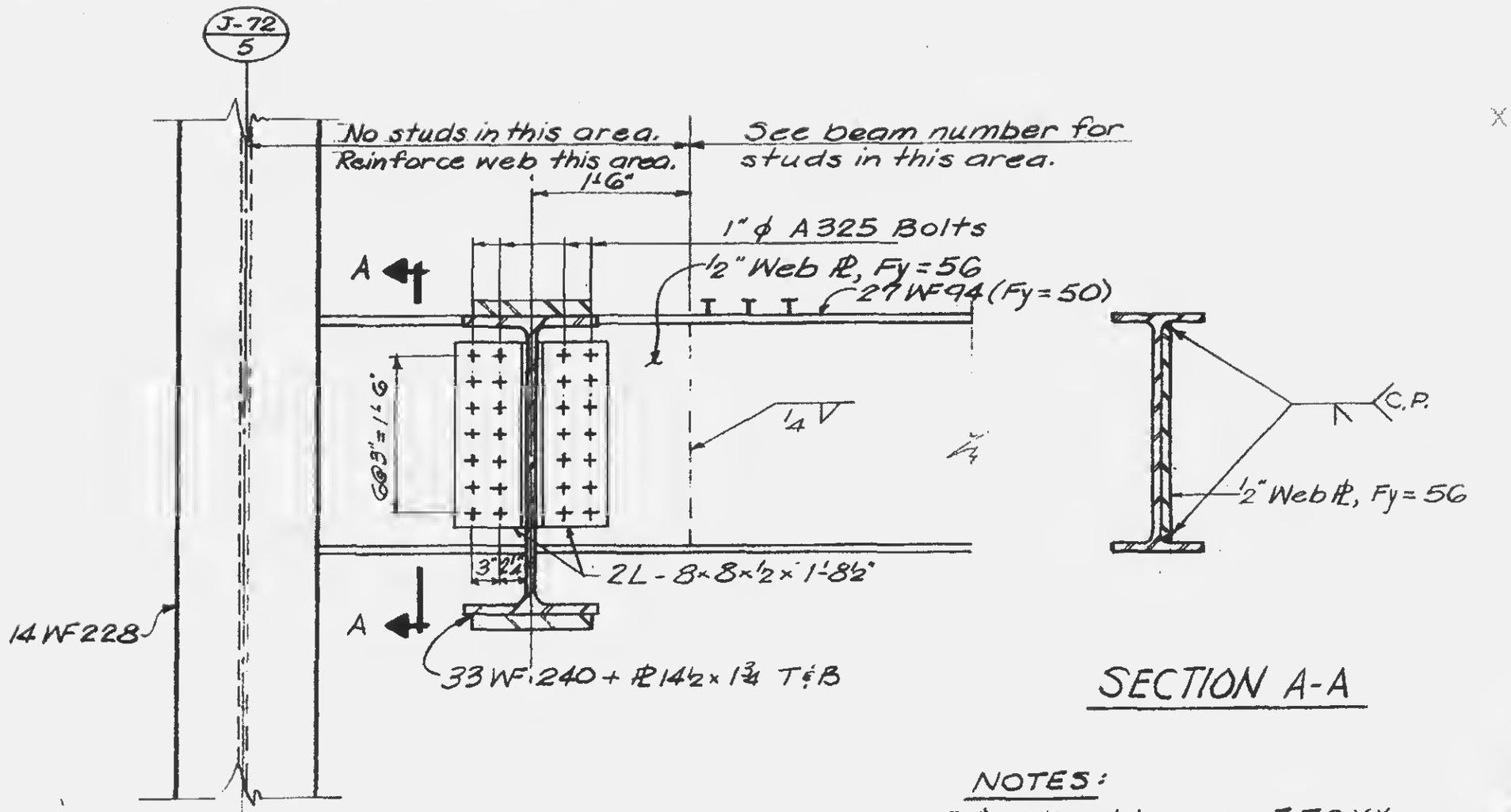

SECTION A-A

NOTES:
1) All welds are E70XX.
2) All bolts are A325 High Strength (friction type).

LESLIE E. ROBERTSON LICENSED PROFESSIONAL ENGINEER No. 34360 UNIVERSITY OF THE STATE OF NEW YORK

DESIGNED

DRAWN

REVIEWED

12-JK2-160