REVISIONS

PROJECT THE WORLD TRADE CENTER

TITLE CONSTRUCTION JOINT DETAIL

DATE 1-3-69

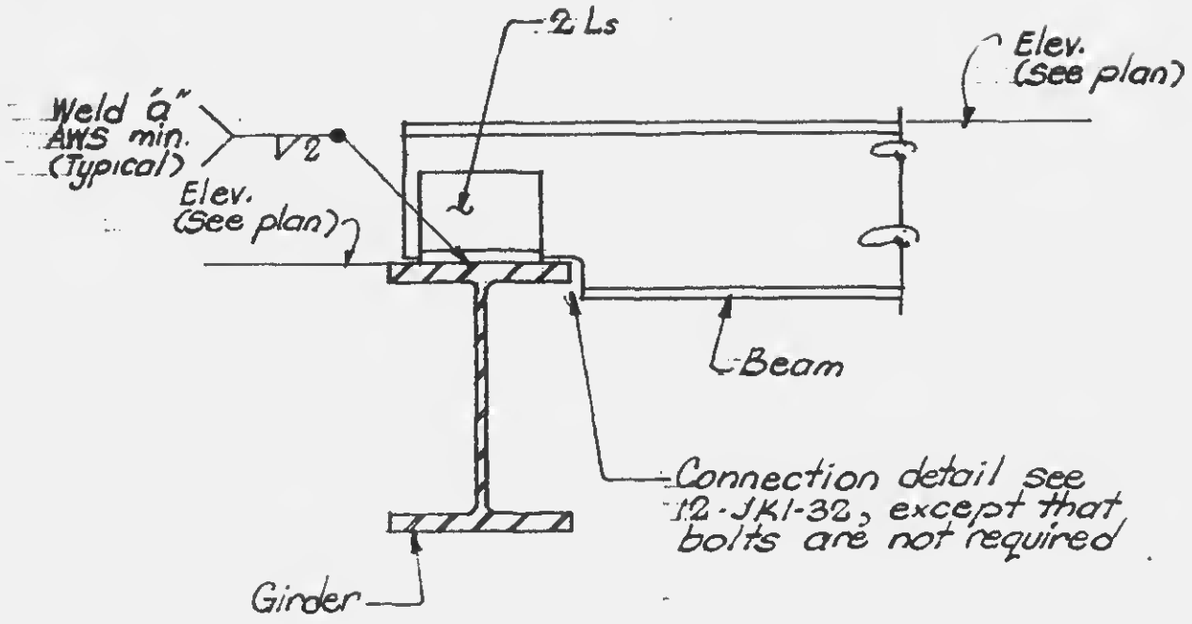

NOTES:

1. Weld "a" to be carried out after pouring concrete to the construction joint.

LICENSED PROFESSIONAL ENGINEER
LESLIE E. ROBERTSON
No. 34360
UNIVERSITY OF THE STATE OF NEW YORK

DESIGNED

DRAWN
S.T.M.

REVIEWED
E.L.

12-JK3-11