SKILLING, HELLE, CHRISTIANSEN, ROBERTSON

PROJECT THE WORLD TRADE CENTER | TITLE CONSTRUCTION JOINT DETAIL

REVISIONS

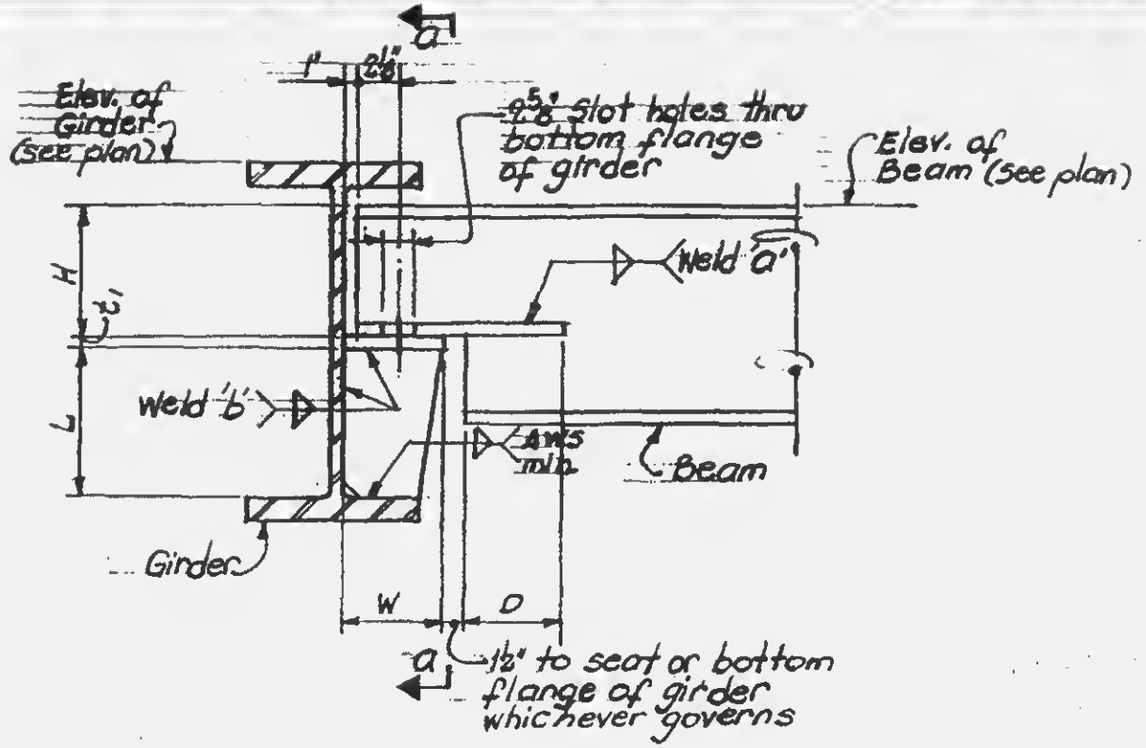

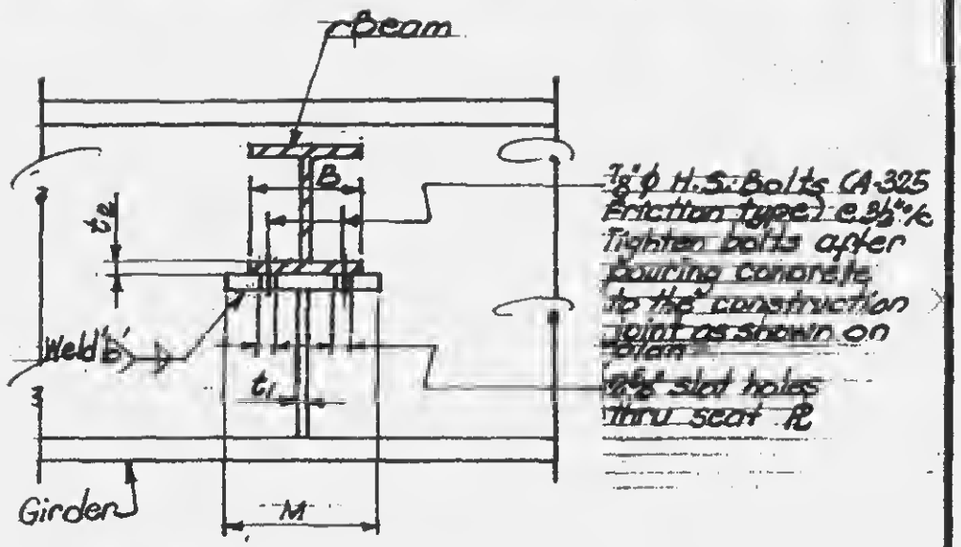

Section a-a

NOTES:

1. All material to be Fy=42 KSI
2. All welds to be E70XX.
3. Provide washers 2 1/2" x 5/8" (round or square) with Fy=50 for all bolts over slot holes.

DETAIL No.	GIRDER		BEAM							SEAT				
	SIZE	ELEV.	SIZE	ELEV.	H	B	t_2	D	WELD 'a'	W	L	M	t_1	WELD 'b'
1	24WF110	309'-1"	16WF78	309'-1"	1'-2 1/4"	6"	1"	6"	5/16"	5"	9"	8"	1"	7/16"
2	36WF135	309'-1"	16WF71	309'-1"	NO BLOCKING					6"	17 9/16"	8"	1"	5/16"
3	36W135	309'-1"	16WF36	309'-1"	NO BLOCKING					6"	17 13/16"	8"	1"	5/16"
4	33WF141	289'-0 1/2"	24WF68	289'-5"	1'-9 13/16"	8"	1"	8"	5/16"	5"	14"	8"	1"	5/16"
5	33WF141	289'-0 1/2"	24WF84	289'-5"	1'-8 13/16"	8"	1"	9"	5/16"	5"	15"	8"	1"	5/16"
6	J4M	289'-3"	16B31	289'-1"	NO BLOCKING					6"	29 5/8"	8"	1"	5/16"
7	30WF172	289'-5"	16B31	289'-5"	NO BLOCKING					6"	12 15/16"	8"	1"	5/16"
8	33WF240	288'-6"	30WF108	289'-3"	NO BLOCKING					5"	11 1/4"	8"	1"	1/2"
9	33WF240	288'-6"	21WF73	288'-5"	1'-4 7/8"	8"	1"	8"	5/16"	5"	13"	8"	1"	5/16"

LICENSED PROFESSIONAL ENGINEER LESLIE E. ROBERTSON No. 34360 UNIVERSITY OF THE STATE OF NEW YORK

DESIGNED

DRAWN S.T.M.

REVIEWED E.L.

12-JK3-12