SKILLING HELLE CHRISTIANSEN ROBERTSON

Project: THE WORLD TRADE CENTER — ESCALATOR SUPPORTING BEAMS AT PATH PLATFORMS (El. 250) — DATE 12/10/76

REVISIONS

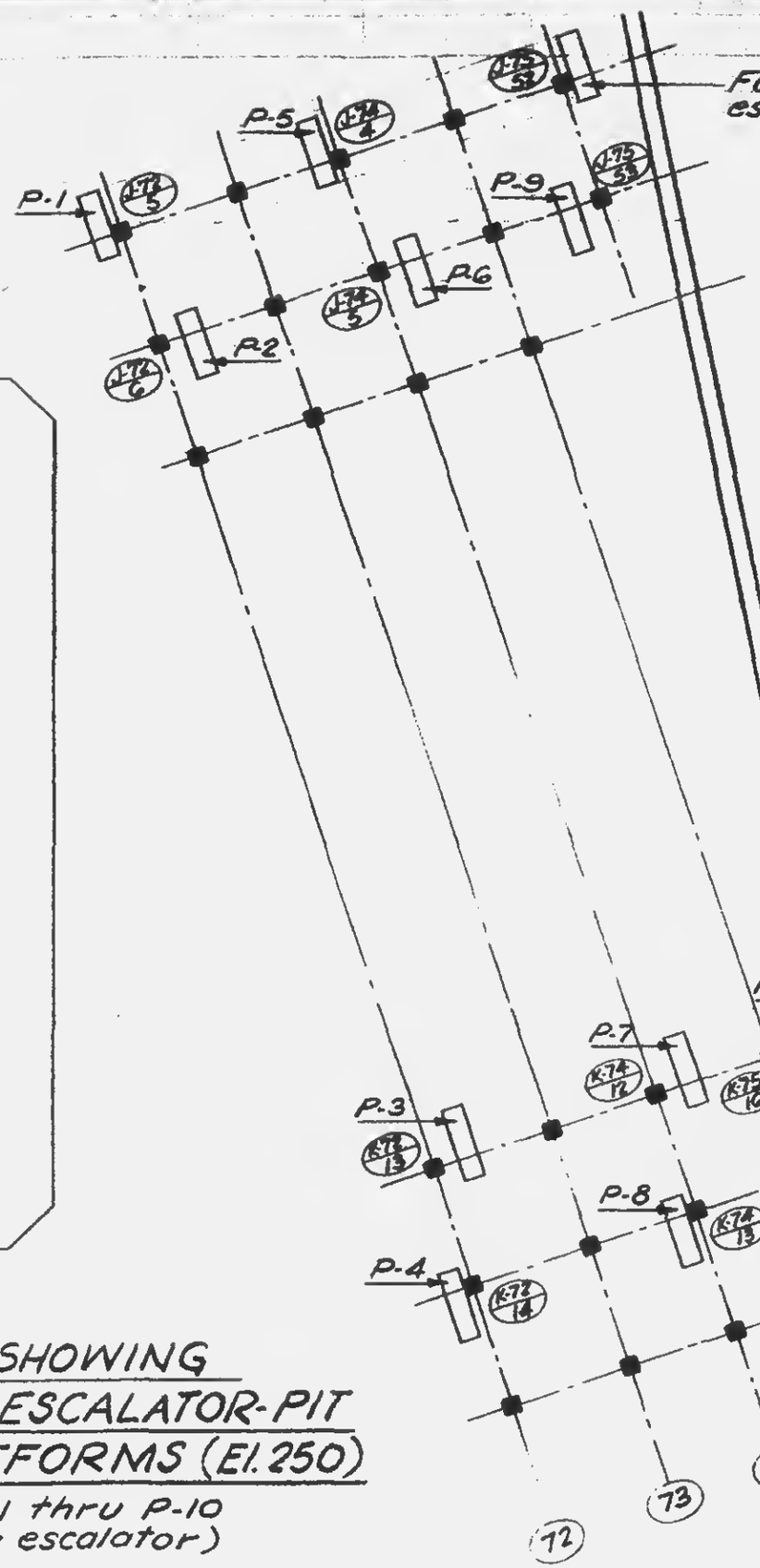

TOWER A

KEY PLAN SHOWING LOCATION OF ESCALATOR-PIT AT PATH PLATFORMS (El. 250)

(Escalators P-1 thru P-10 and one future escalator)

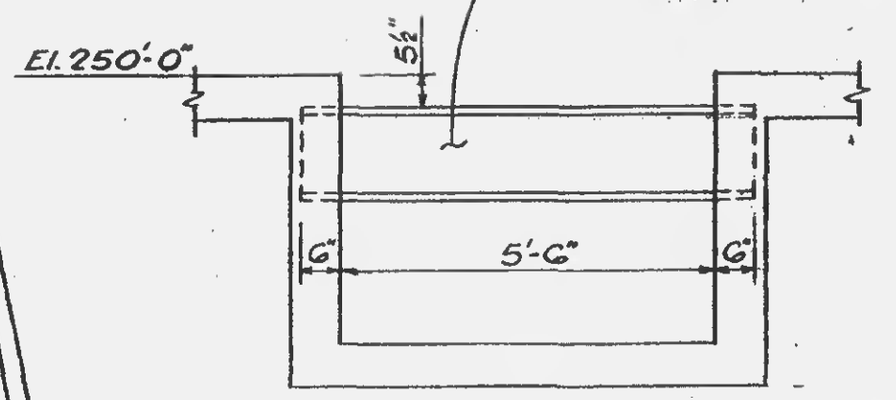

Section Thru Escalator Pit

(no scale)

NOTE:
See concrete dwgs SCJ-29 and SCK-33 for location of escalator pits & beams.

LICENSED PROFESSIONAL ENGINEER — LESLIE E. ROBERTSON — No. 34360 — UNIVERSITY OF THE STATE OF NEW YORK

DESIGNED

DRAWN S.C.

REVIEWED E.L.

12-JK3-30