SKILLING, HELLE, CHRISTIANSEN, ROBERTSON — Structural & Civil Engineers

PROJECT: THE WORLD TRADE CENTER | TITLE: UTILITY SUPPORTS ALONG EAST PERIMETER WALL | DATE: 12-17-68

REVISIONS

4-18-69

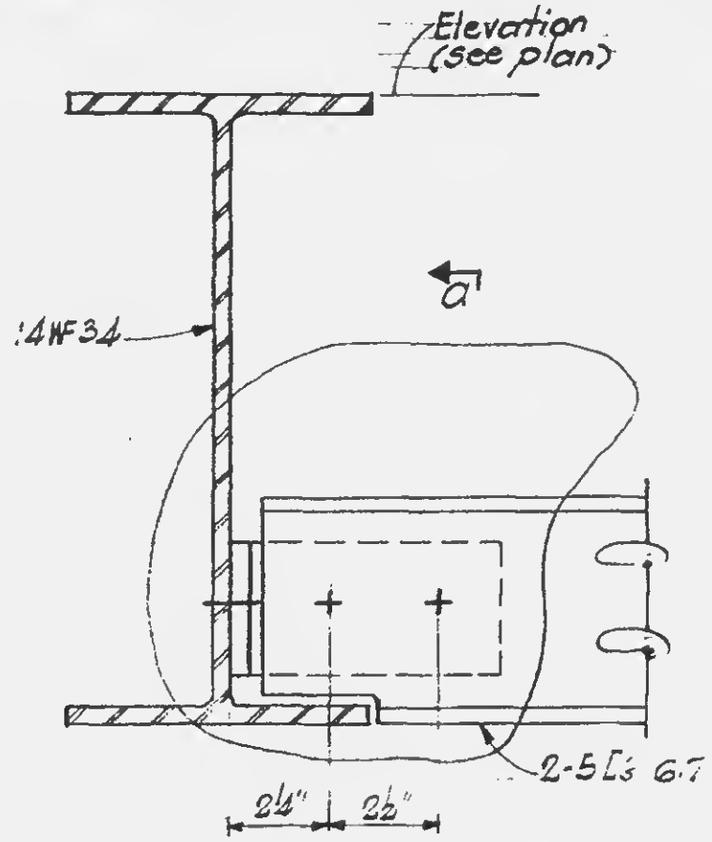

DETAIL – 1

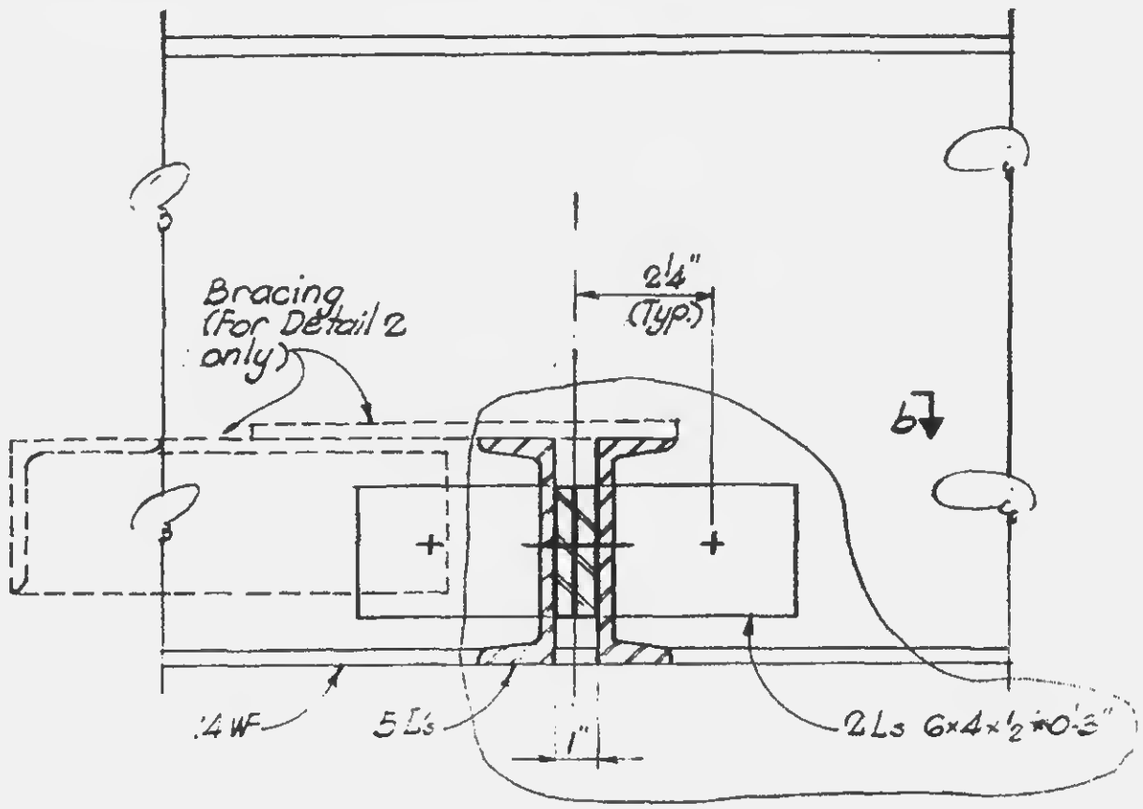

Section a-a

DETAIL – 2

NOTES:

a. All bolts shown are ¾" ϕ H.S. A-325 friction type.

c. All steel to be A-36.

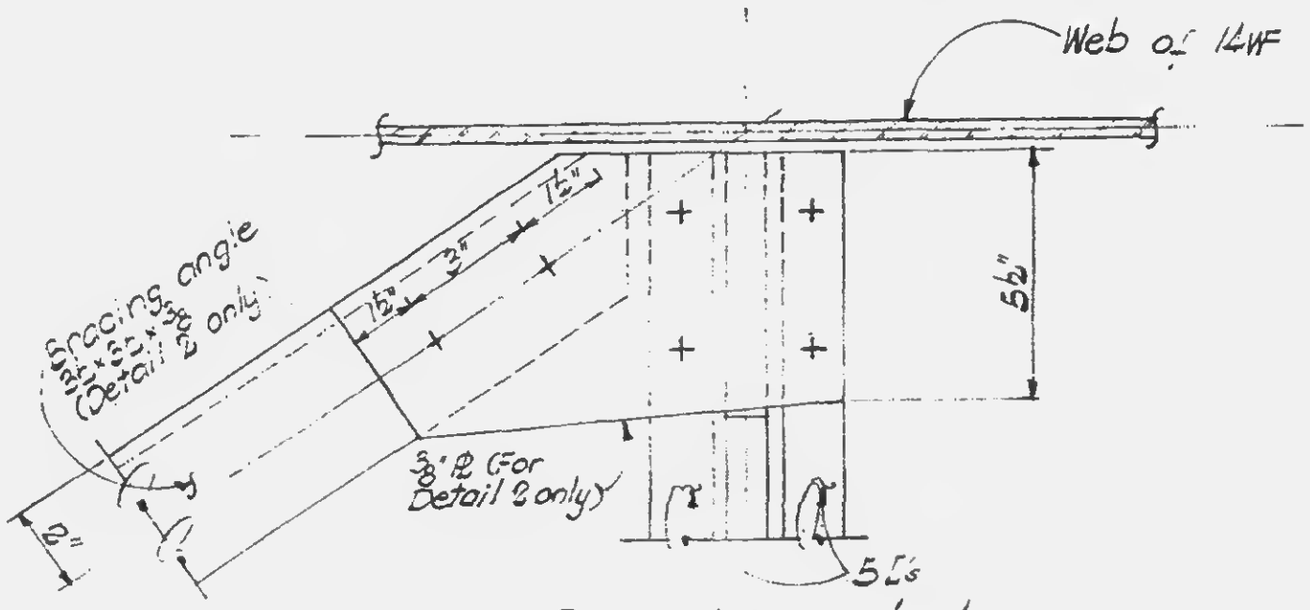

Section b-b

LICENSED PROFESSIONAL ENGINEER
LESLIE E. ROBERTSON
No. 34360
UNIVERSITY OF THE STATE OF NEW YORK

DESIGNED

DRAWN
S.C.

REVIEWED
E.L.

12-JK3-52