SKILLING, HELLE, CHRISTIANSEN, ROBERTSON — Structural & Civil Engineers

PROJECT: THE WORLD TRADE CENTER | TITLE: CONNECTION DETAIL FOR COLUMN ~~44~~ 7 (EL 332'-0") | DATE: 1-13-69

REVISIONS

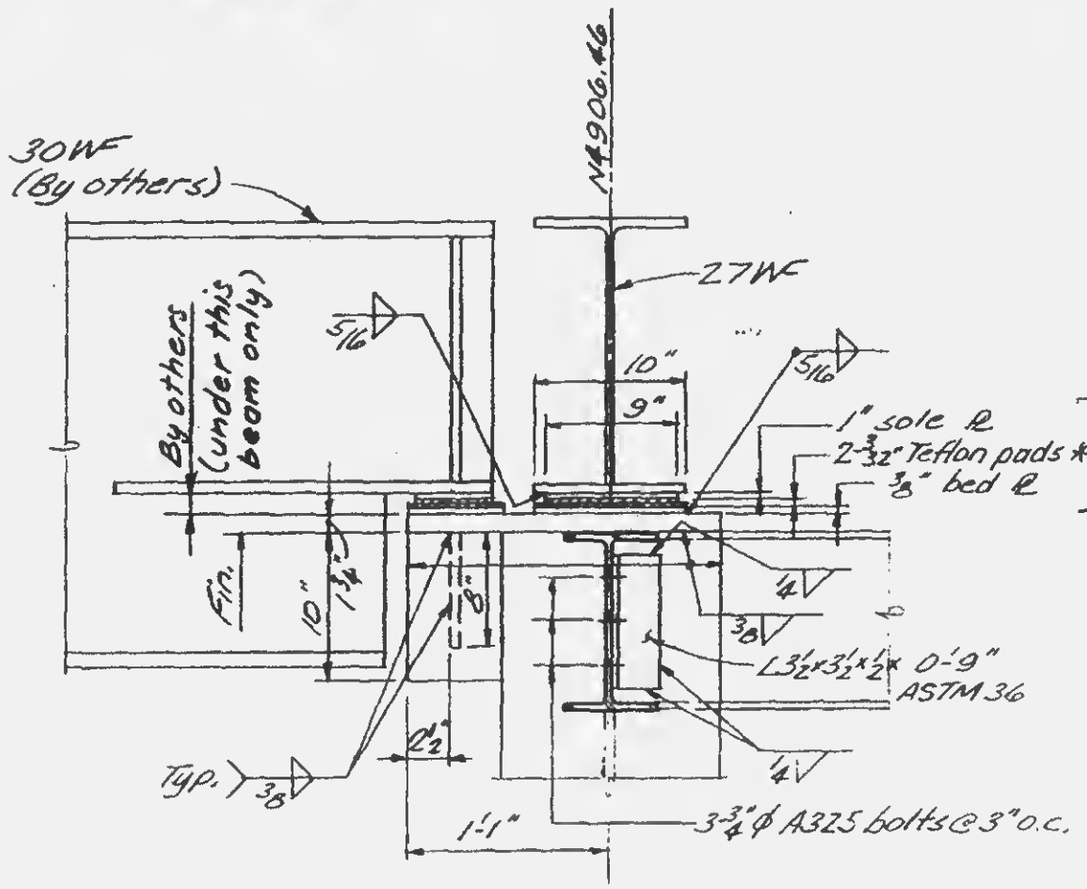

Section a-a

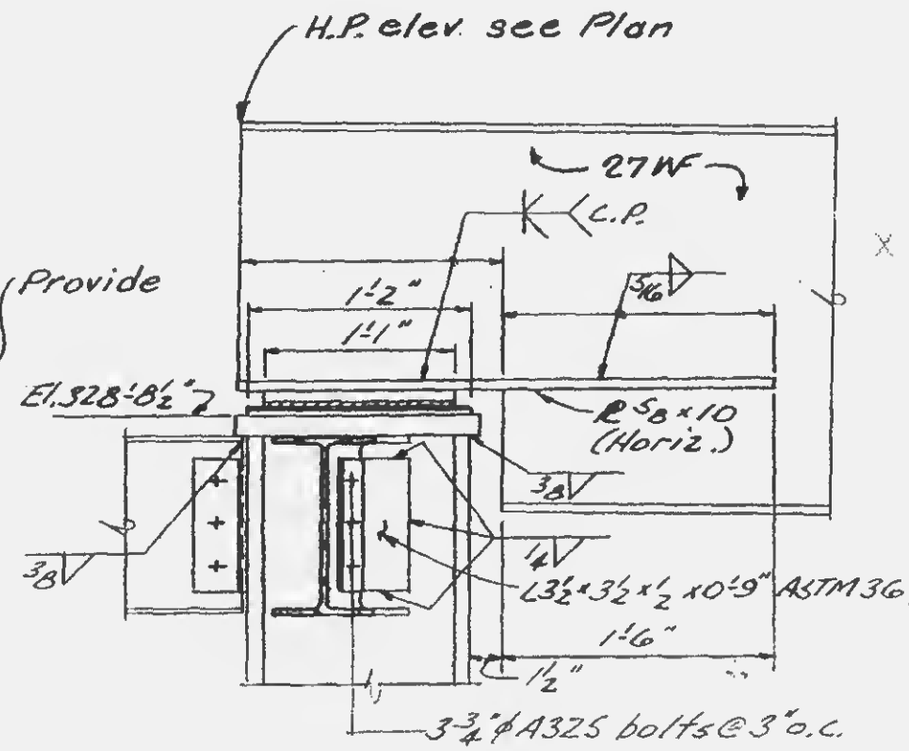

Section b-b

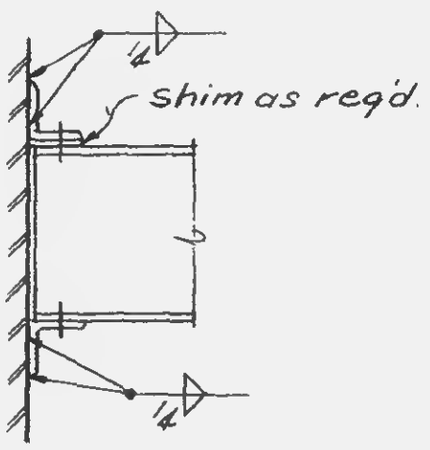

Section c-c

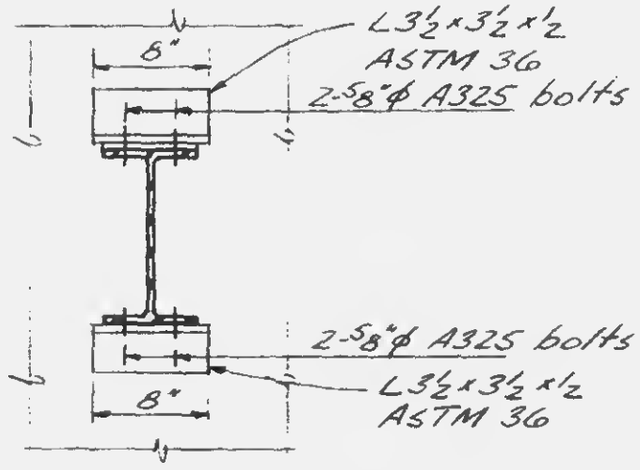

Section d-d

* Teflon pads have a bearing capacity of 2000 psi.

LICENSED PROFESSIONAL ENGINEER — LESLIE E. ROBERTSON — No. 34360 — STATE OF NEW YORK

DESIGNED

DRAWN: J. Adams

REVIEWED: R.T. & E.L.

12-JK4-16