SKILLING, HELLE, CHRISTIANSEN, ROBERTSON — Structural & Civil Engineers

PROJECT: THE WORLD TRADE CENTER | TITLE: BEAM CONNECTIONS TO SLURRY WALL-DETAIL A | DATE: 3-19-69

REVISIONS

5-29-69

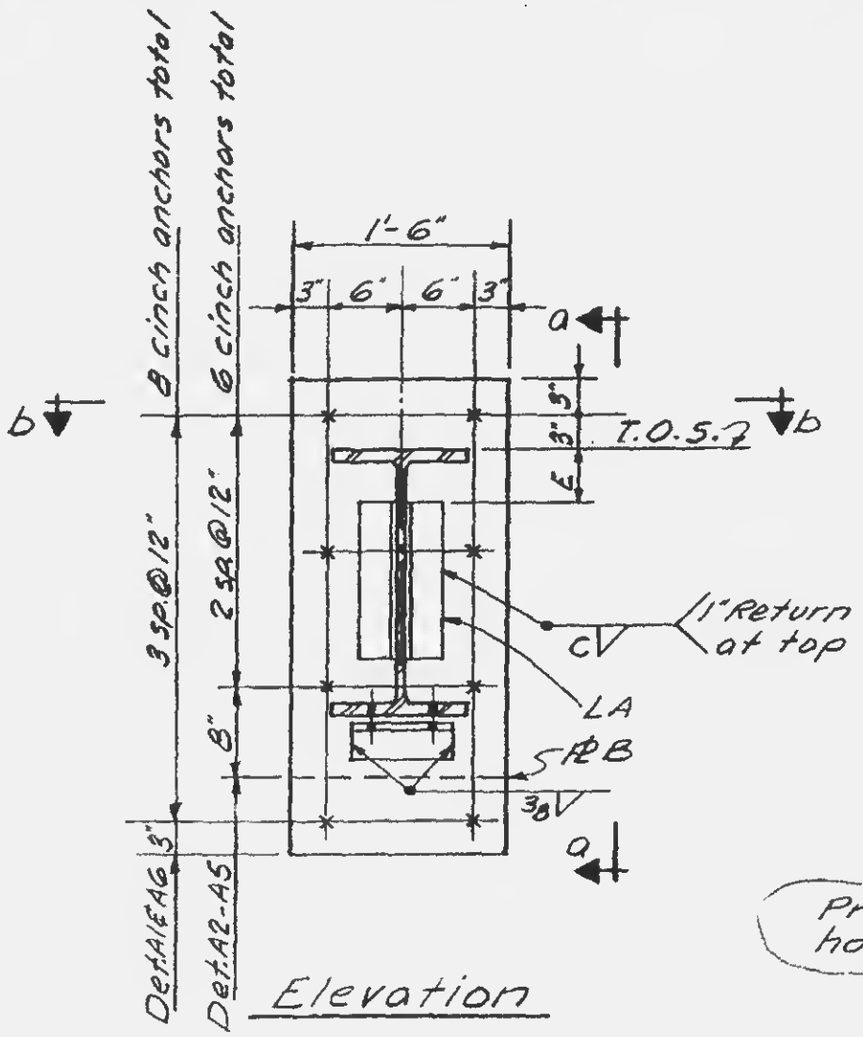

Elevation

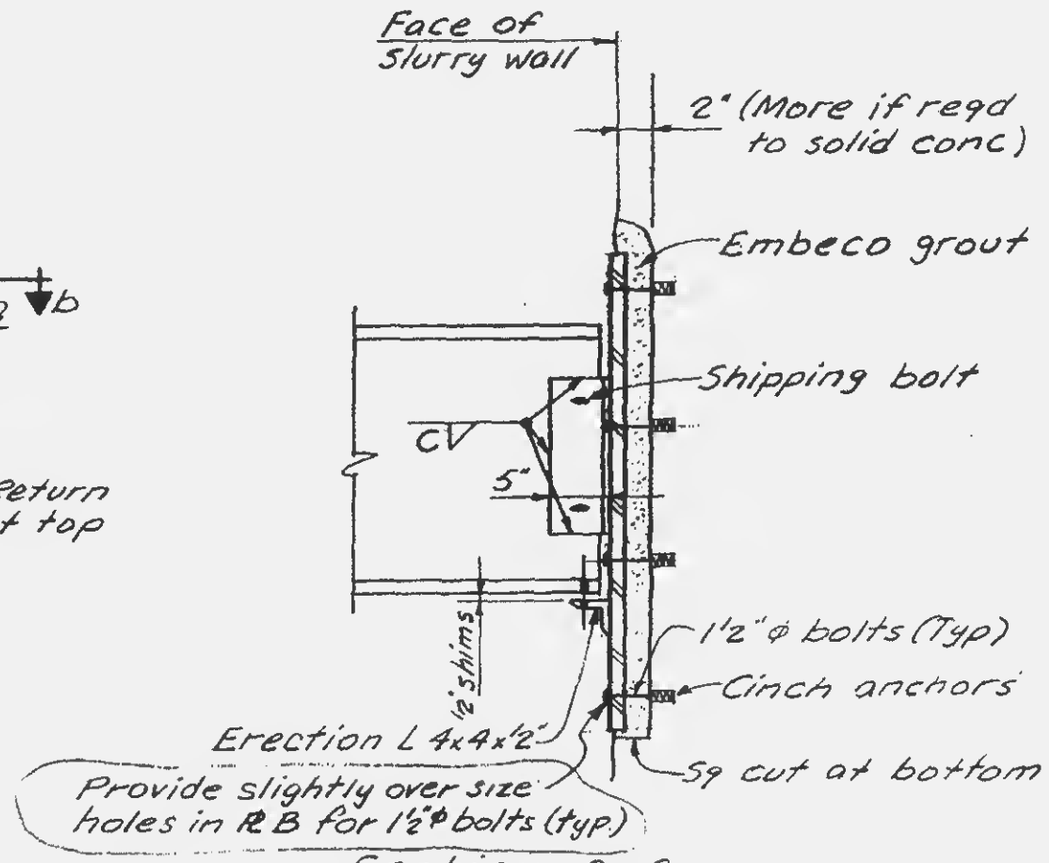

Section a-a

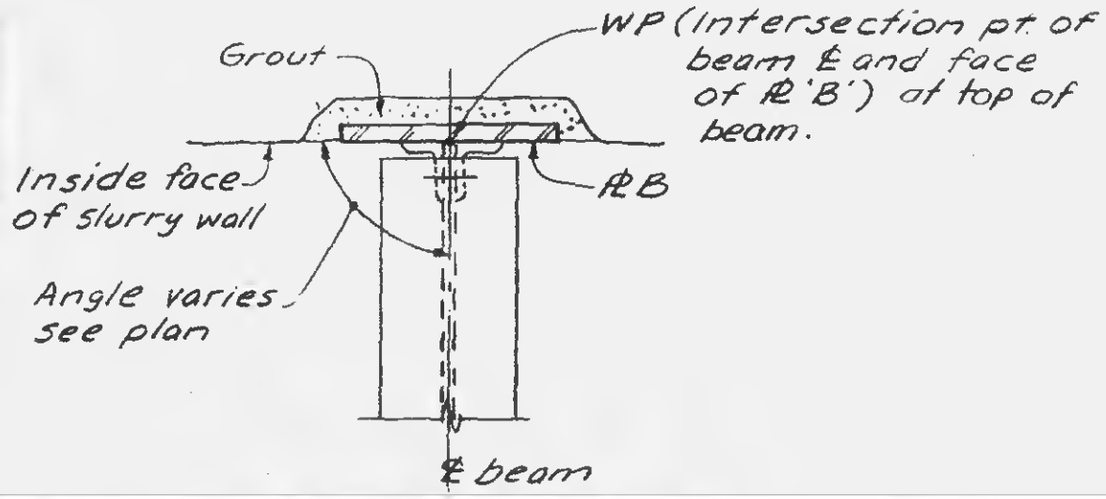

Section b-b

Notes:
1. See notes on 12-JK5-1

LICENSED PROFESSIONAL ENGINEER
LESLIE E. ROBERTSON
No. 34360
UNIVERSITY OF THE STATE OF NEW YORK

DESIGNED J.H.

DRAWN A.L. FRANQUI

REVIEWED E.L.

12-JK5-4