SKILLING, HELLE, CHRISTIANSEN, ROBERTSON — Structural & Civil Engineers

PROJECT: THE WORLD TRADE CENTER | TITLE: BEAM CONNECTIONS TO SLURRY WALL-DETAIL B | DATE: 3-19-69

REVISIONS

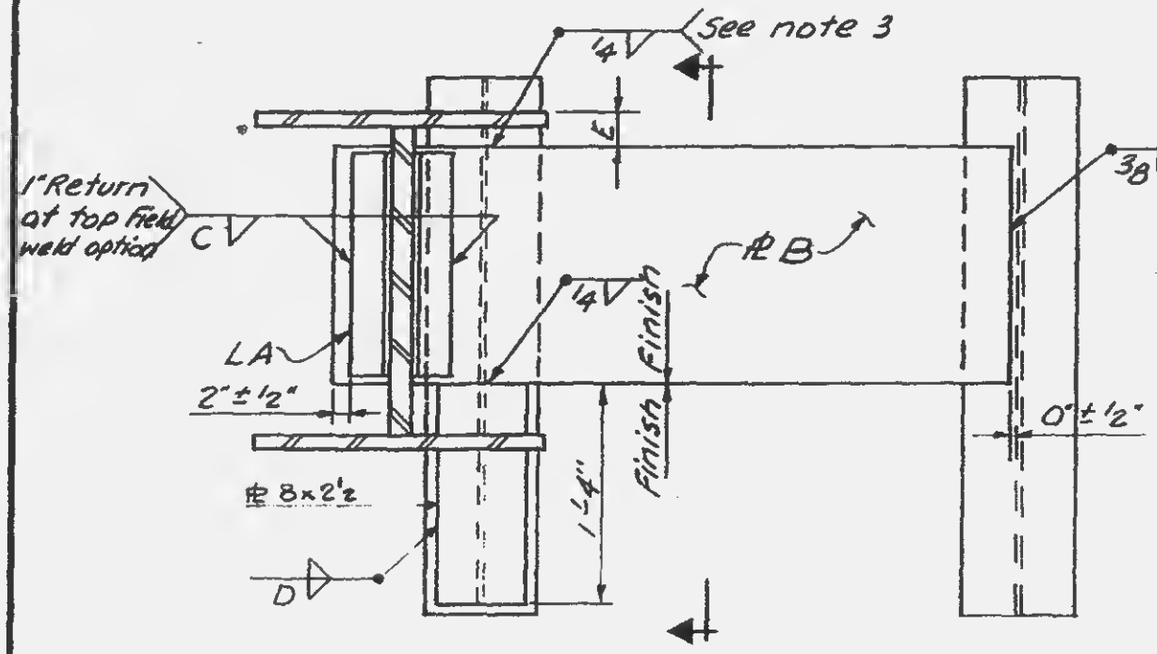

Elevation

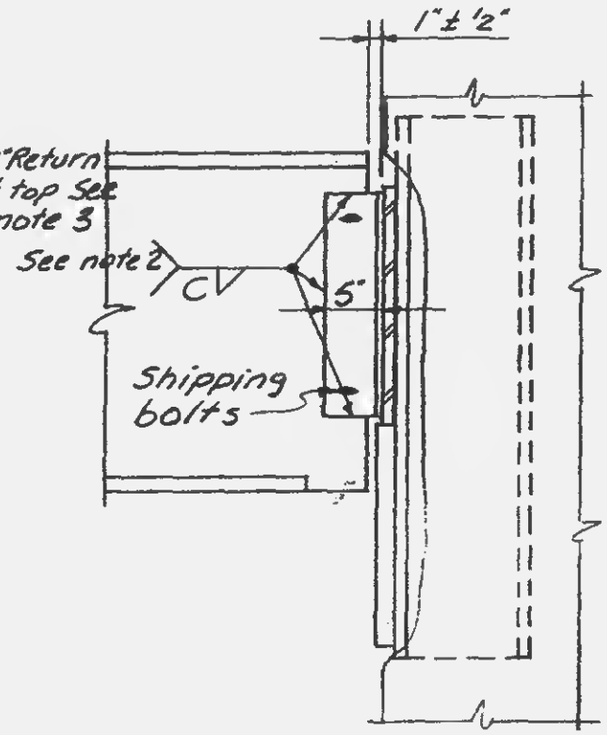

Section

Notes:

1. See notes on 12-JK5-1
2. If erection clearance is allowed between beam web & connection angles, size of weld has to be increased by the dimension of this gap. (Max clearance = 1/8")
3. Due to the deviation of exist. beam supports, the weld size shown has to be increased by the dimension of the gap between PL and sup't. In no case should this gap be greater than 1/8".

LICENSED PROFESSIONAL ENGINEER — LESLIE E. ROBERTSON — No. 34960 — UNIVERSITY OF THE STATE OF NEW YORK

DESIGNED: J.H.

DRAWN: A.L. FRANQUI

REVIEWED: E.L.

12-JK5-5