SKILLING, HELLE, CHRISTIANSEN, ROBERTSON — STRUCTURAL & CIVIL ENGINEERS

PROJECT THE WORLD TRADE CENTER | TITLE KI-EL. 310 REPAIR DETAIL FOR EXISTING STEEL | DATE 6-12-72

REVISIONS
6-16-72
1-24-73

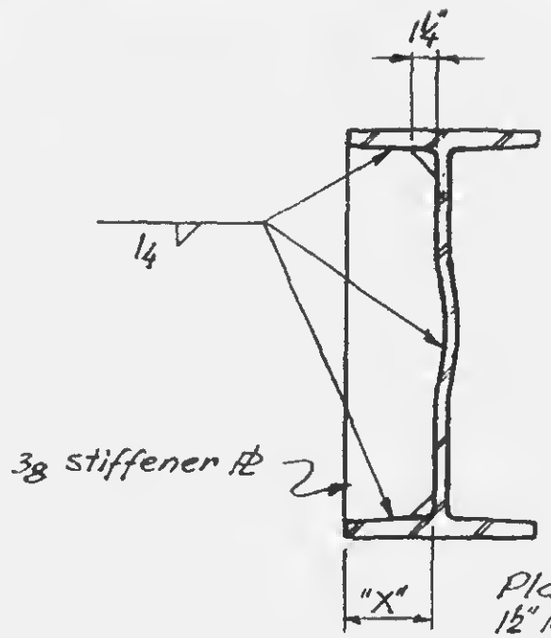

Section a-a

Plate to be fabricated 1½" larger than dimension "X" to allow for trimming.

Note F (SK-97) Where req'd repair as Detail F-6

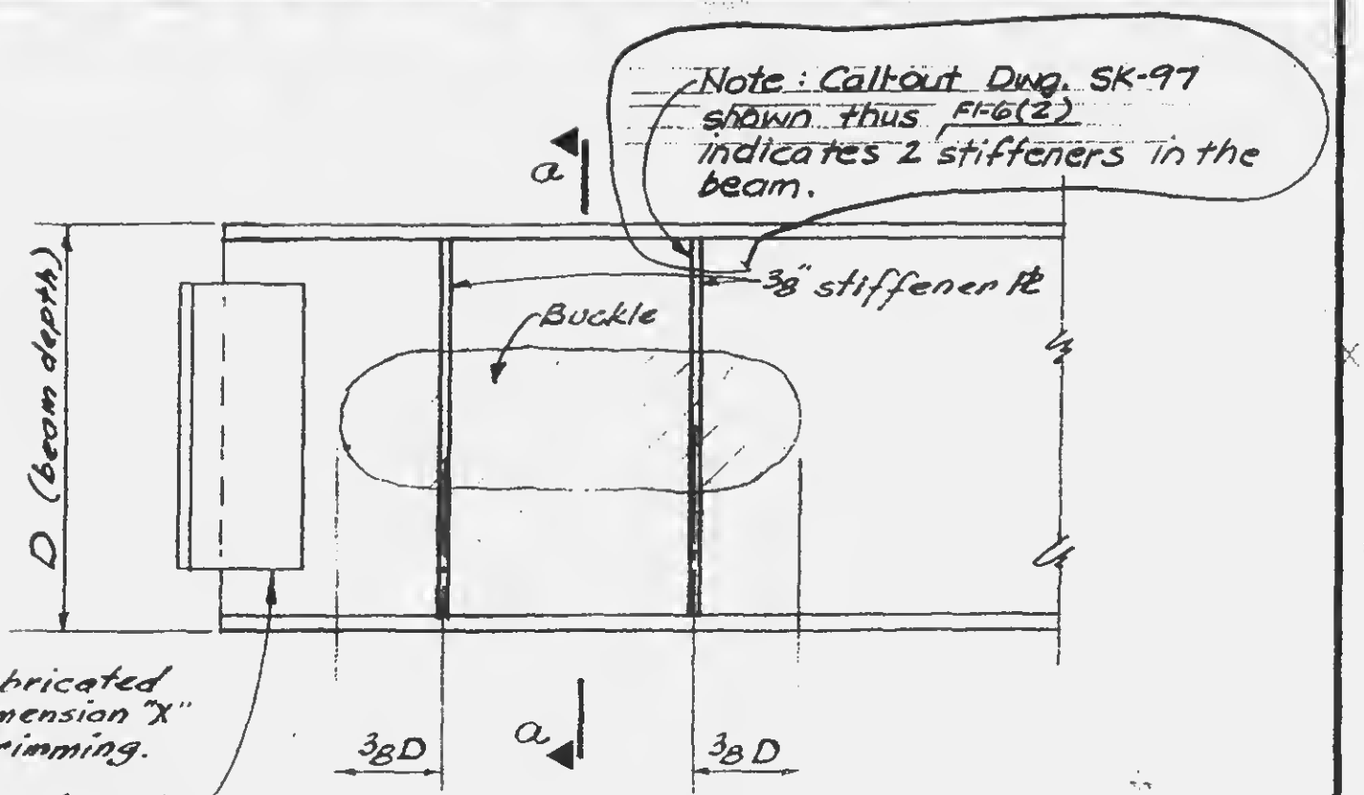

Length of buckle

Procedure

1. Trim vertical stiffener plates to fit and install number and location as shown in table.

3/8" stiffener plates to be placed as follows:

LENGTH OF BUCKLE	NO. OF PLATES	PLACEMENT OF STIFFENERS
0.75 D	1	Center in bulge
0.75 D > 1.00 D	2	as shown above
1.00 D > 2.00 D	3	2 outside as shown above - center one centered between

Detail F1
Buckled web

LICENSED PROFESSIONAL ENGINEER LESLIE E. ROBERTSON No. 34960 UNIVERSITY OF THE STATE OF NEW YORK

DESIGNED
DRAWN
REVIEWED

12-JK7-6