SKILLING, HELLE, CHRISTIANSEN, ROBERTSON — Structural & Civil Engineers

PROJECT: THE WORLD TRADE CENTER

TITLE: PIPE OPENINGS IN BEAMS

DATE: 2-12-73

REVISIONS

2-26-73

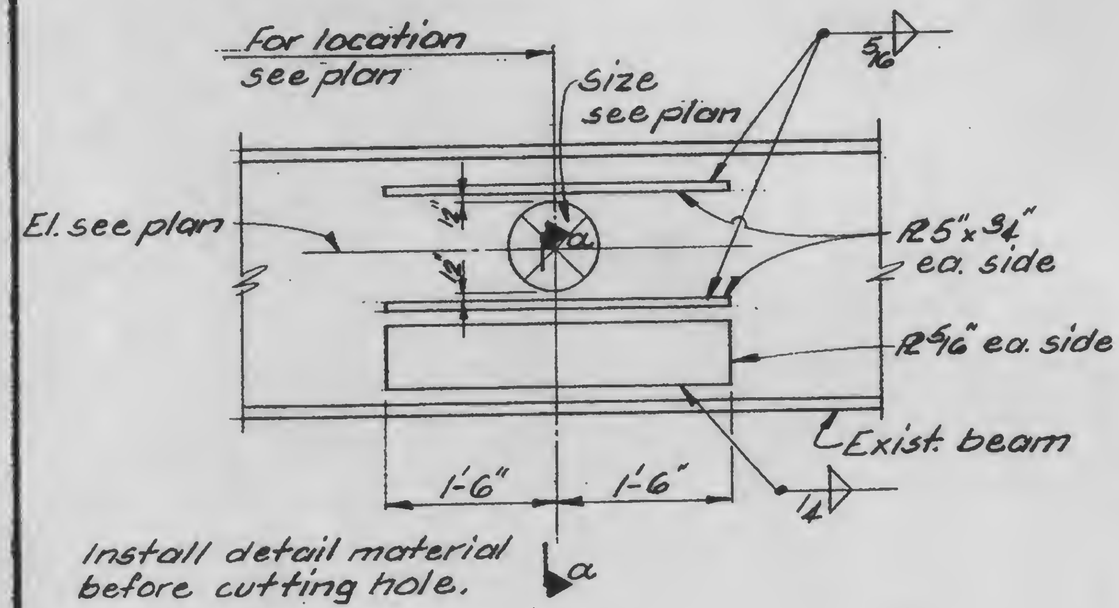

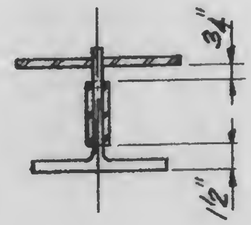

A a

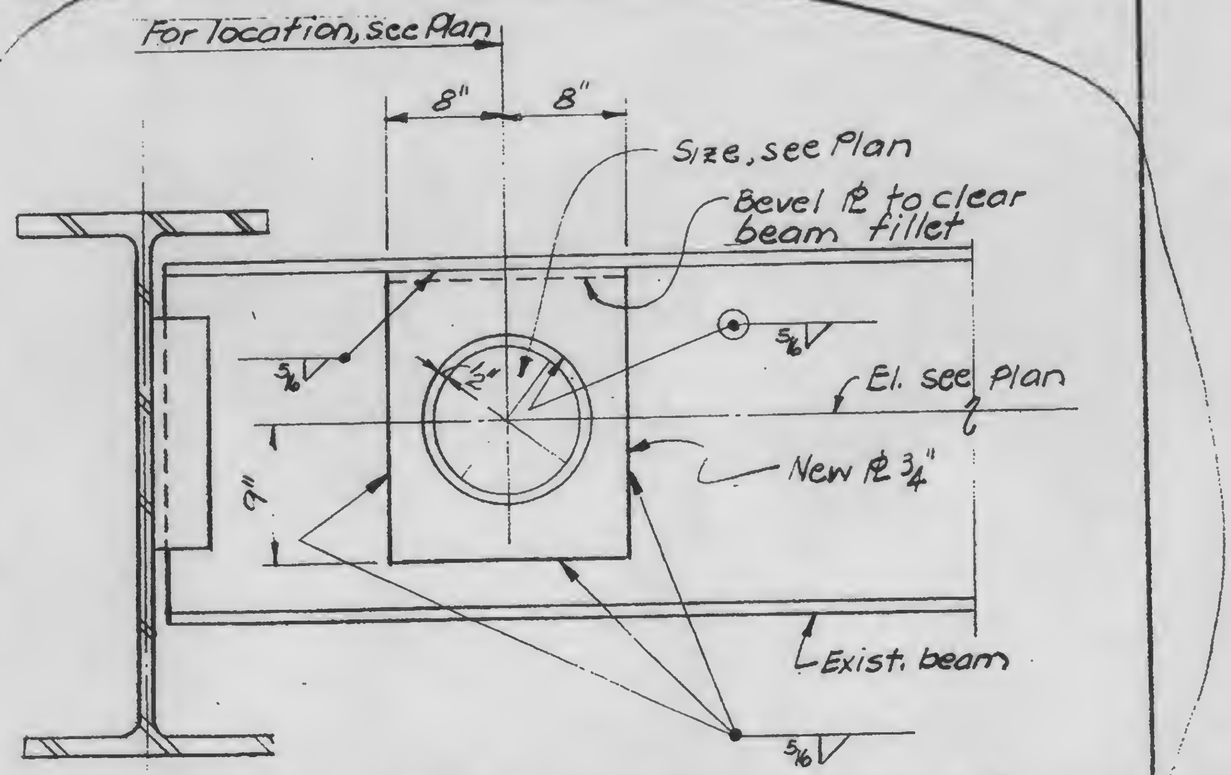

NOTE: Install & completely weld new PL before cutting hole in exist. beam

B

DESIGNED

DRAWN
T.R.

REVIEWED

13-K1.3-2