SKILLING, HELLE, CHRISTIANSEN, ROBERTSON — Structural & Civil Engineers

PROJECT: THE WORLD TRADE CENTER | TITLE: TYPICAL STUD DETAILS | DATE: 11-3-72

REVISIONS

Released for construction 11-20-72

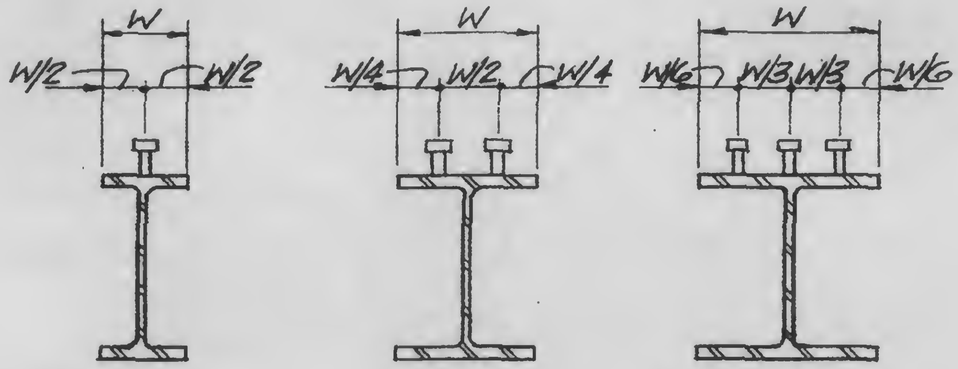

One Row
WS 6
6s WS 9 (Note 4)

Two Rows
(Note 4)

Three Rows
(Note 5)

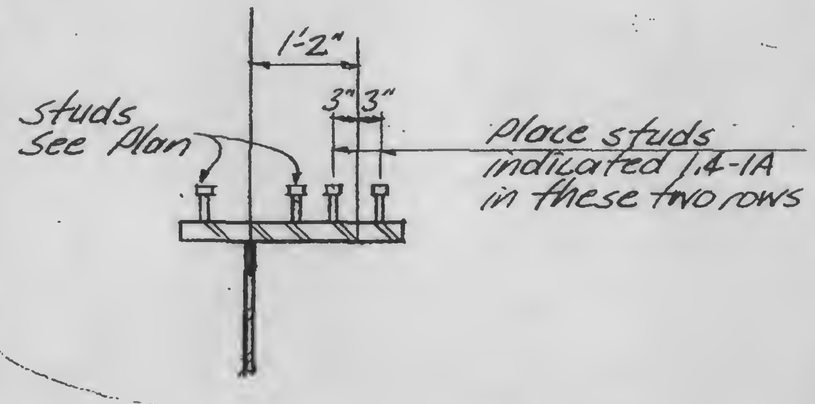

A

Notes:

3. All studs are $\frac{3}{4}\phi \times 0'-3"$ headed shear studs.
4. Use two rows for W=6" to W=9" where studs in a single row would otherwise be less than 4" o.c. Use two rows for W=9" or more where studs in one row would otherwise be less than 4" o.c.
5. Use three rows for W=9" or more where studs in two rows would otherwise be less than 4" o.c.

LICENSED PROFESSIONAL ENGINEER
LESLIE E. ROBERTSON
No 34360
UNIVERSITY OF THE STATE OF NEW YORK

DESIGNED

DRAWN
T.R

REVIEWED

13-K1.4-1