SKILLING, HELLE, CHRISTIANSEN, ROBERTSON — Structural & Civil Engineers

PROJECT: THE WORLD TRADE CENTER | TITLE: COLUMN BASE DETAILS | DATE: 11-3-72

REVISIONS

- RELEASE FOR CONSTRUCTION 11-20-72
- 2-5-73

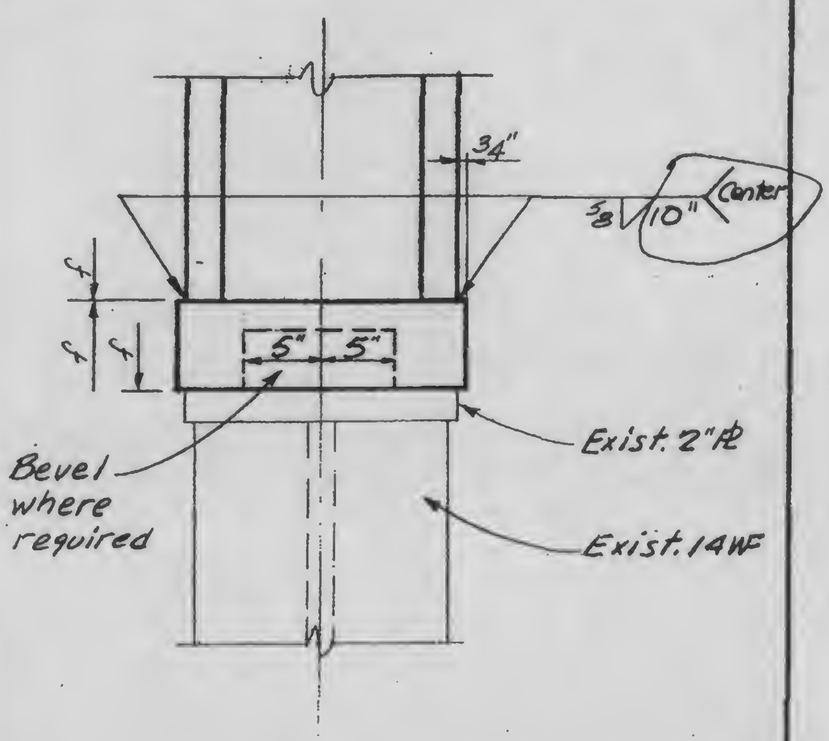

a

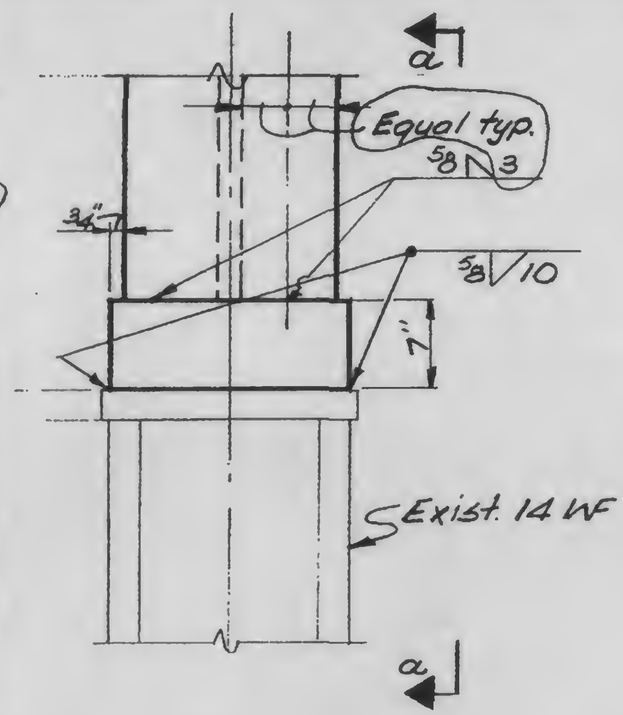

E

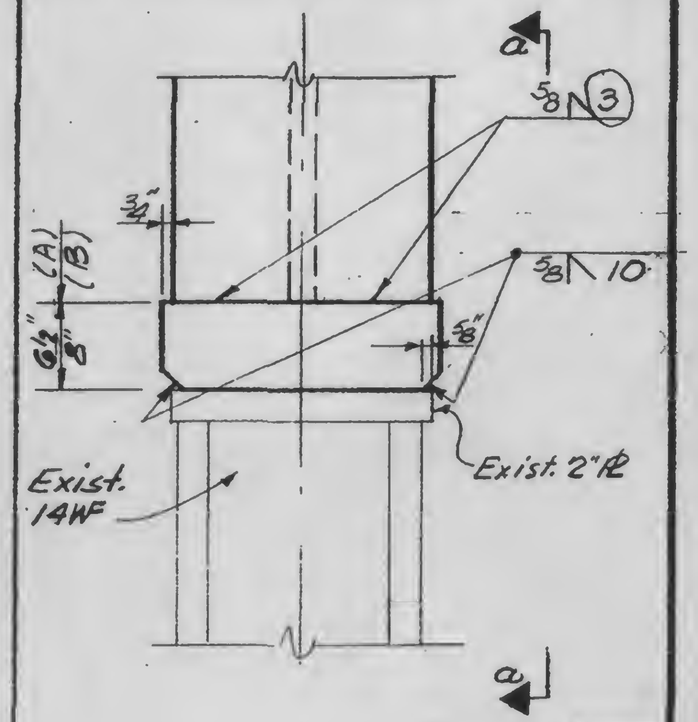

A

B

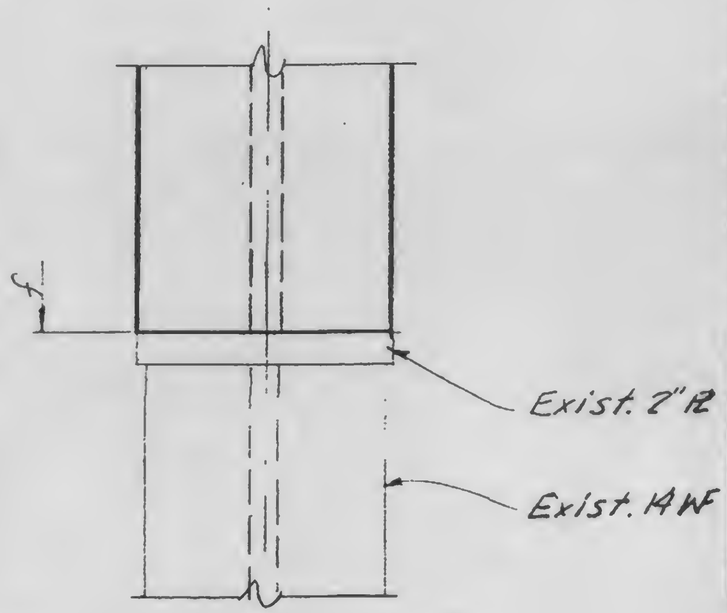

C

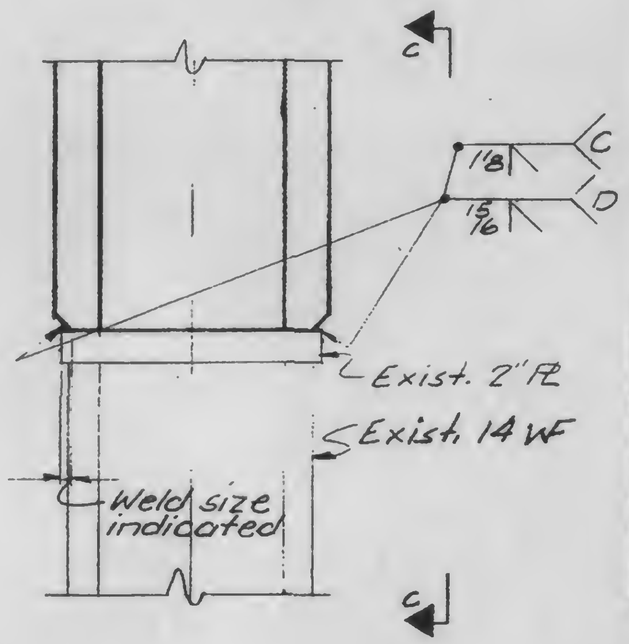

C

D

LICENSED PROFESSIONAL ENGINEER
LESLIE E. ROBERTSON
No 34360
UNIVERSITY OF THE STATE OF NEW YORK

DESIGNED

DRAWN
A.L. Frongui

REVIEWED

13-K2.2-2