SKILLING, HELLE, CHRISTIANSEN, ROBERTSON — Structural & Civil Engineers

PROJECT: THE WORLD TRADE CENTER | TITLE: COLUMN BASE DETAILS | DATE: 11-3-72

REVISIONS

- RELEASE FOR CONSTRUCTION 11-15-72
- 12-11-72

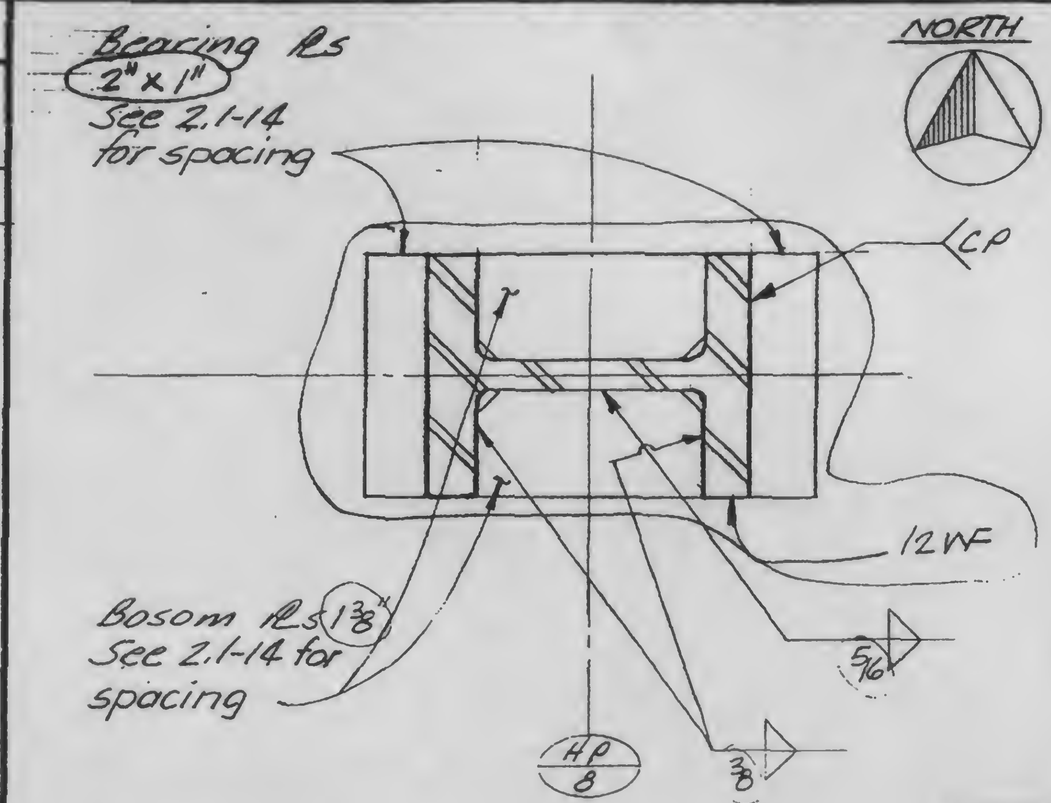

A

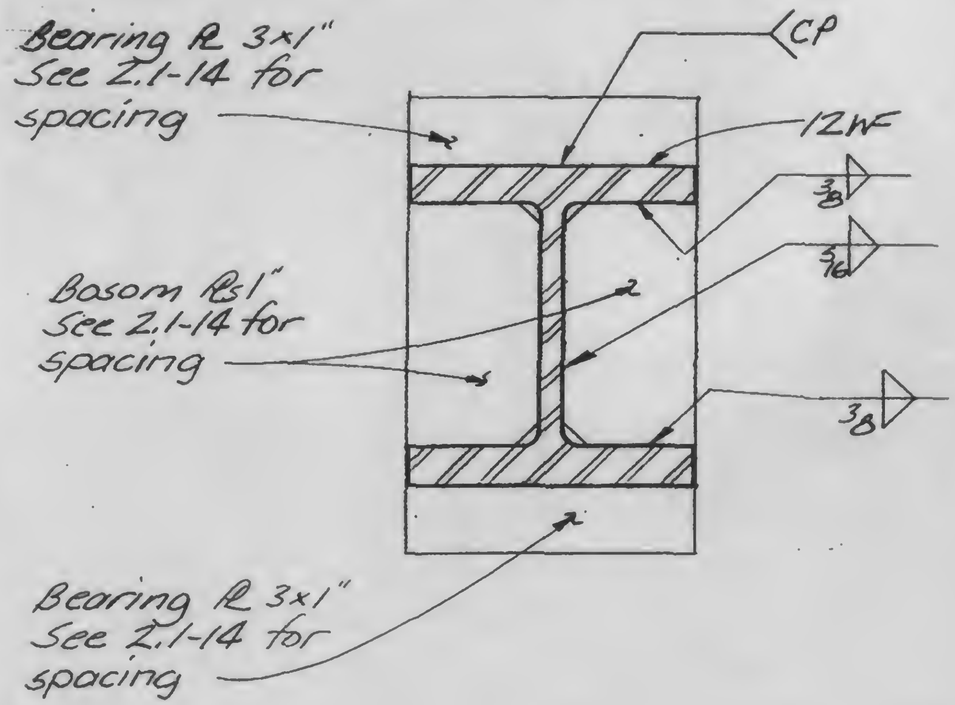

C

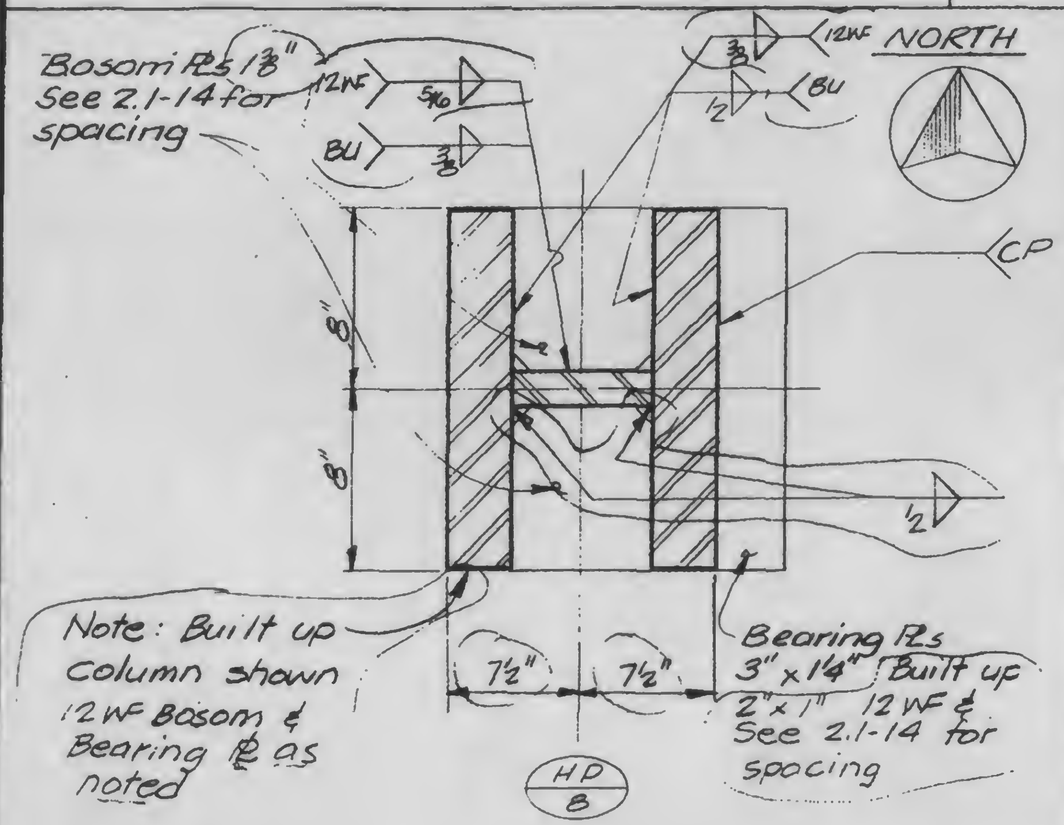

B

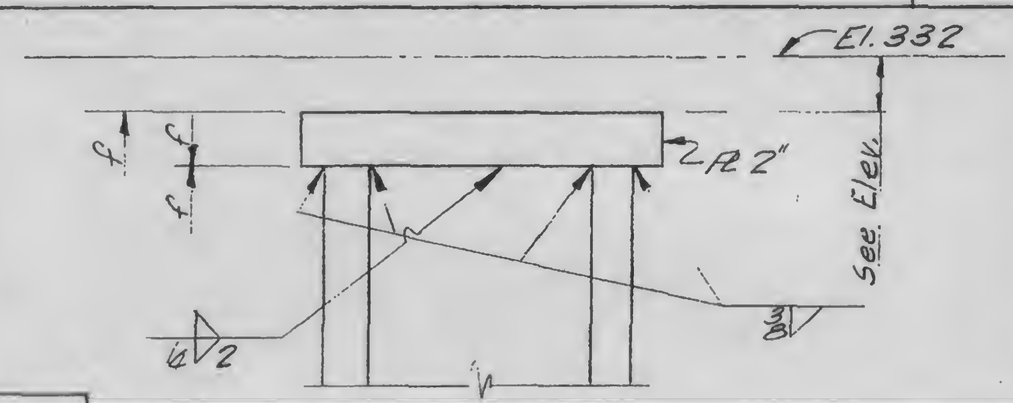

D

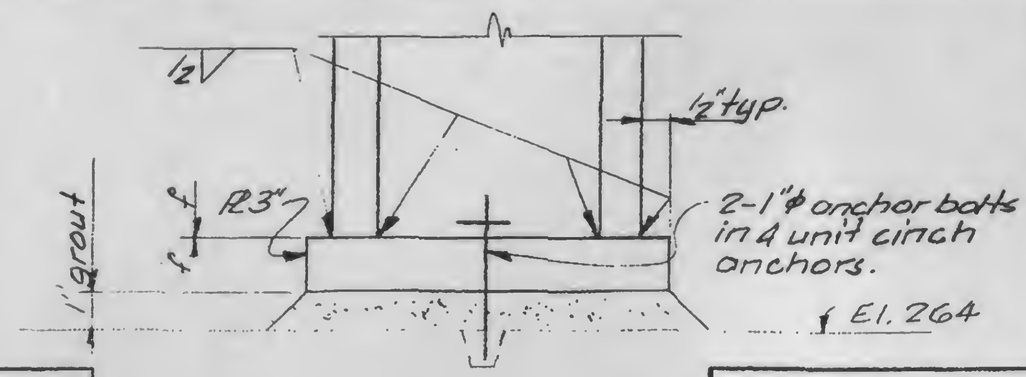

E

LICENSED PROFESSIONAL ENGINEER — LESLIE E. ROBERTSON — No. 34960 — UNIVERSITY OF THE STATE OF NEW YORK

DESIGNED

DRAWN

REVIEWED

13-KZ.2-5