SKILLING, HELLE, CHRISTIANSEN, ROBERTSON — Structural & Civil Engineers

PROJECT: THE WORLD TRADE CENTER | TITLE: GIRDER - FUTURE COLUMN DETAILS | DATE: 11-3-72

REVISIONS

RELEASE FOR CONSTRUCTION 11-20-72

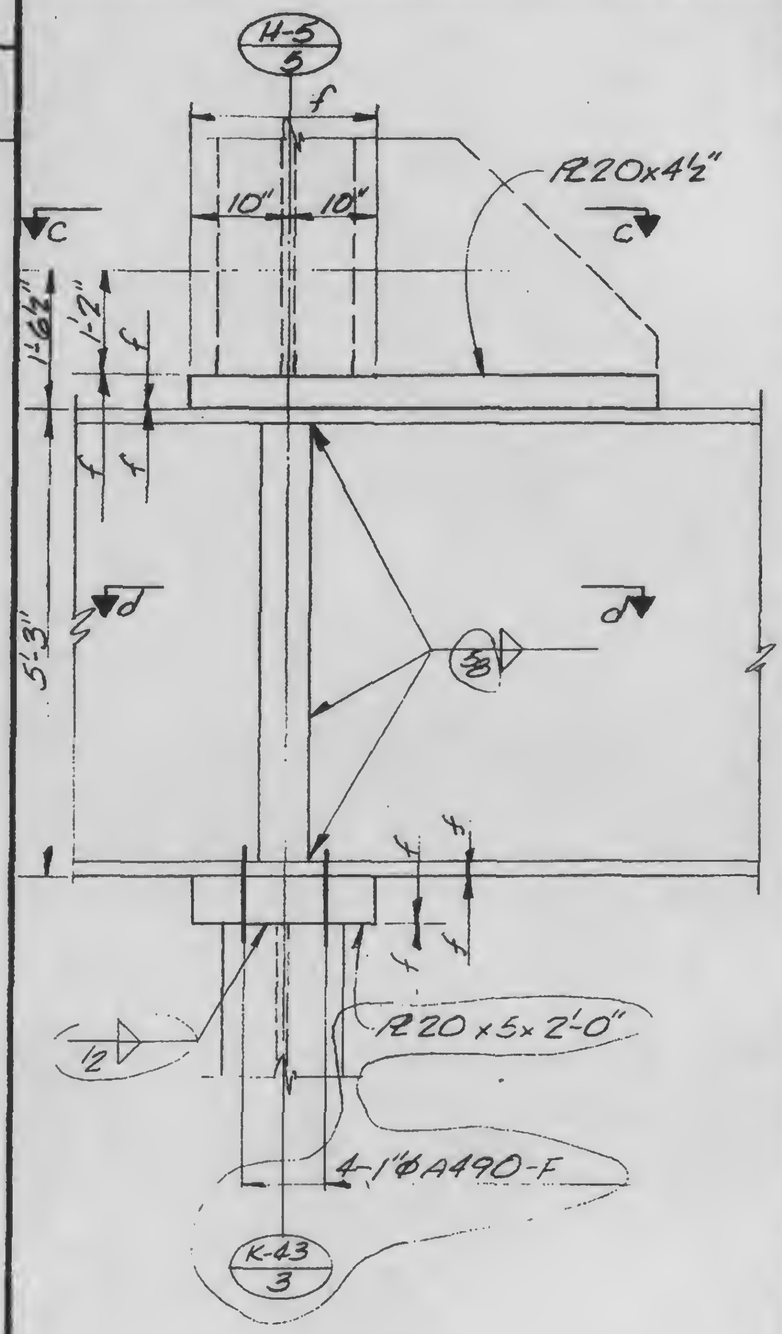

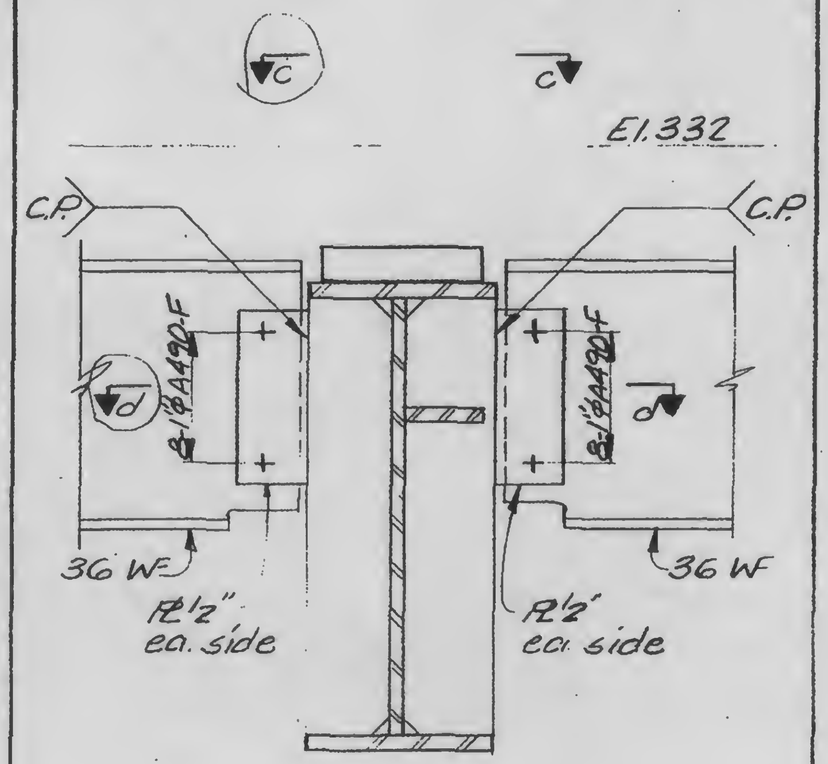

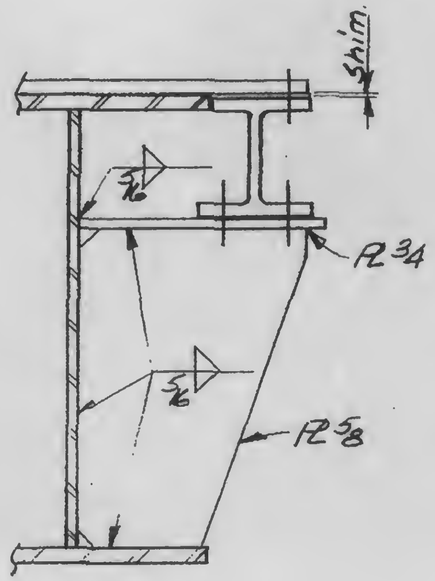

LICENSED PROFESSIONAL ENGINEER
LESLIE E. ROBERTSON
No. 34360
UNIVERSITY OF THE STATE OF NEW YORK

DESIGNED

DRAWN
TR

REVIEWED

a

b

13-K2.5-3.1