SKILLING, HELLE, CHRISTIANSEN, ROBERTSON — Structural & Civil Engineers

PROJECT: THE WORLD TRADE CENTER

TITLE: GIRDER - FUTURE COLUMN DETAILS

DATE: 11-3-72

REVISIONS

RELEASE FOR CONSTRUCTION 11-20-72

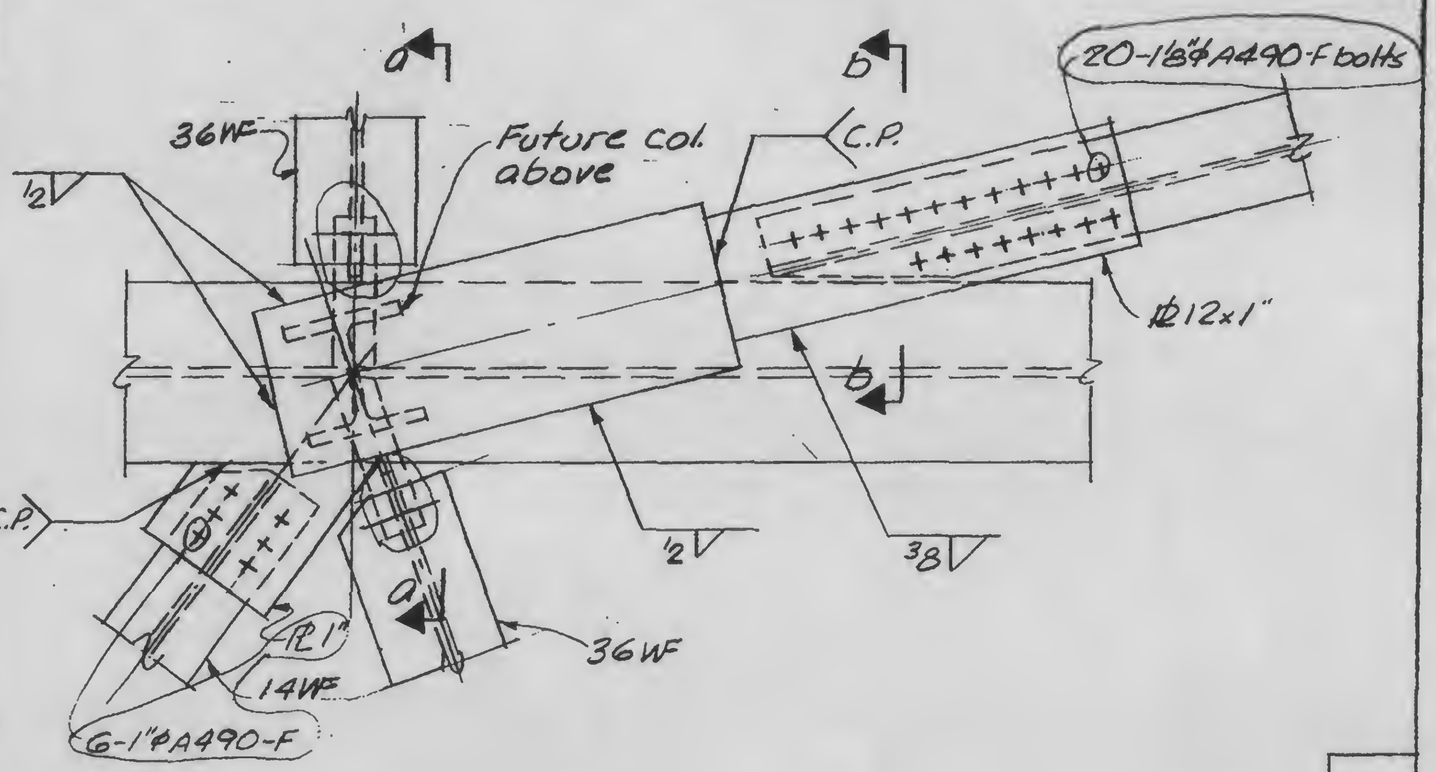

C

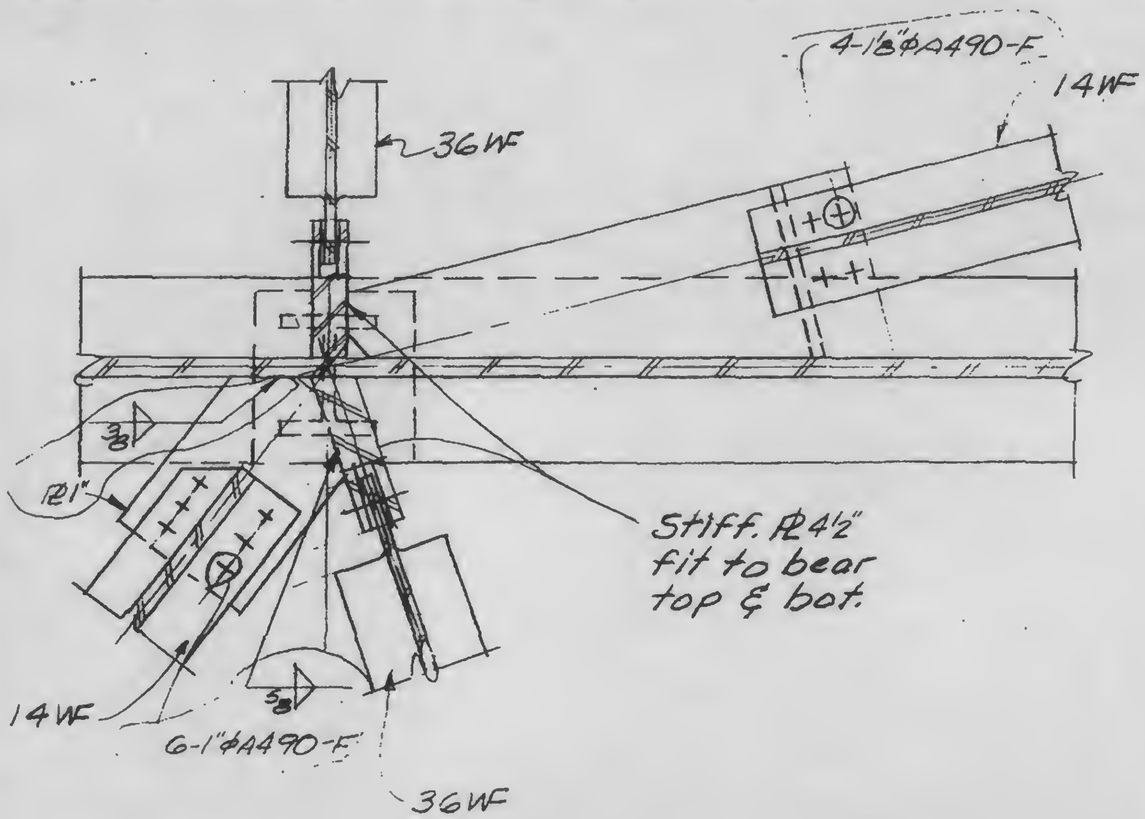

d

LICENSED PROFESSIONAL ENGINEER
LESLIE E. ROBERTSON
No. 34960
UNIVERSITY OF THE STATE OF NEW YORK

DESIGNED

DRAWN A.L. Franqui

REVIEWED

13-K2.5-3.2