SKILLING, HELLE, CHRISTIANSEN, ROBERTSON — Structur

PROJECT THE WORLD TRADE CENTER | TITLE GIRDER CONNECTION | DATE 11/3/72

REVISIONS

Released for construction 11-30-72

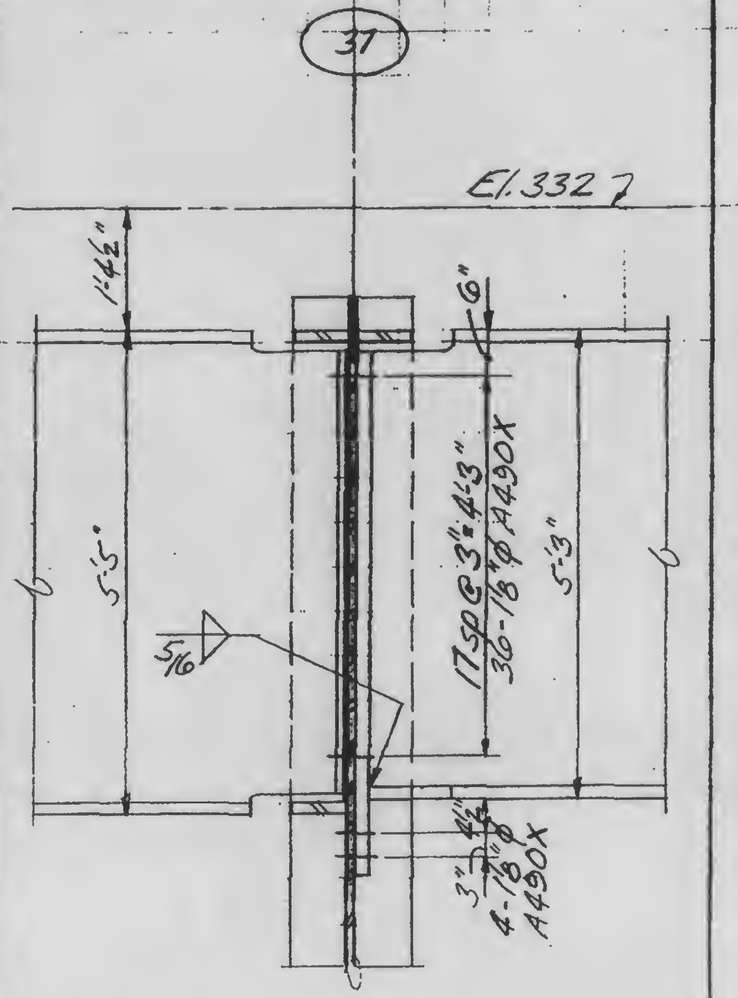

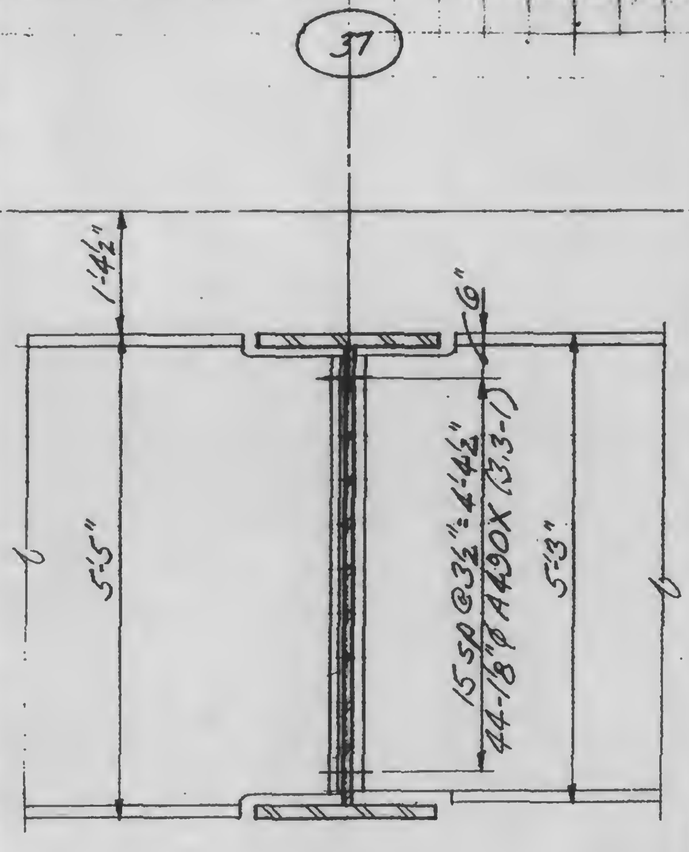

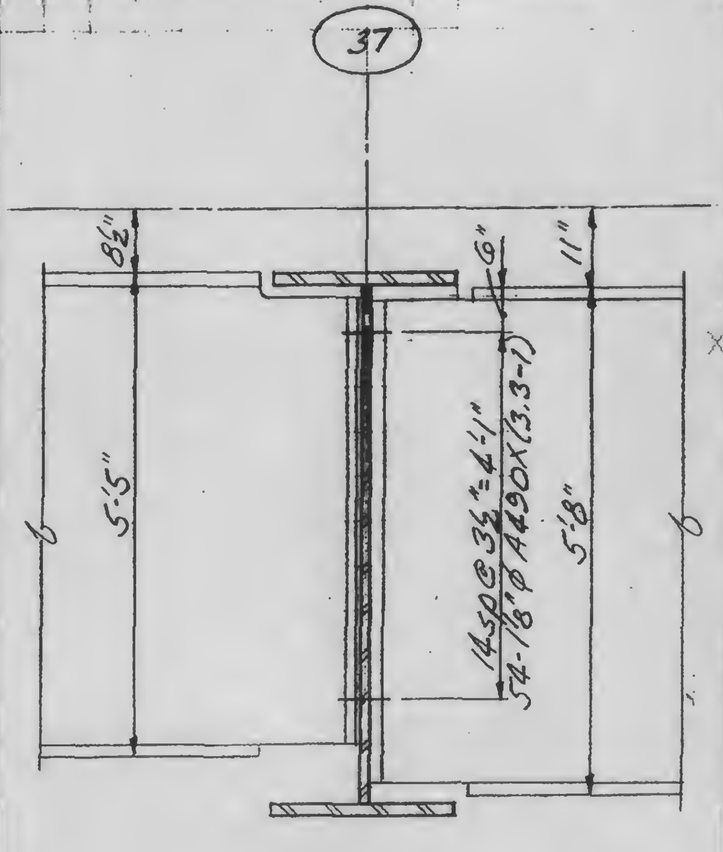

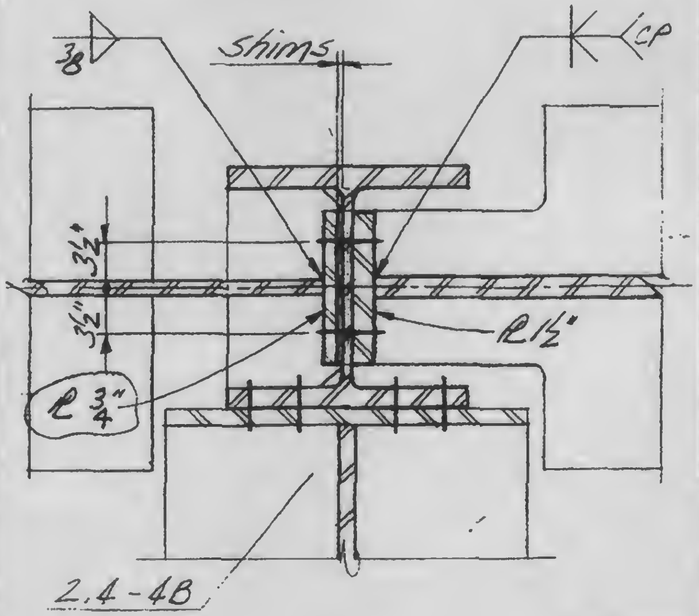

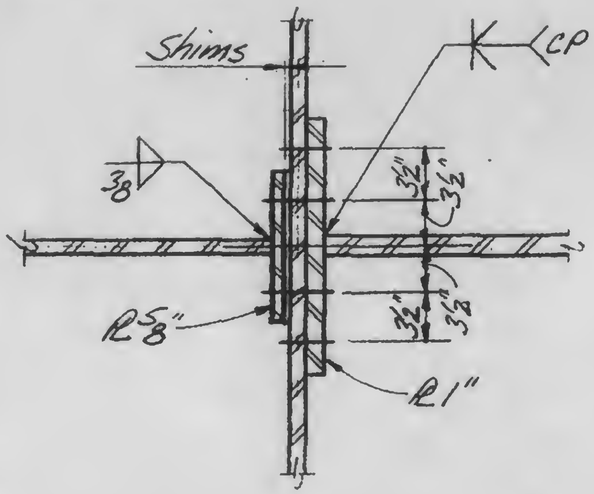

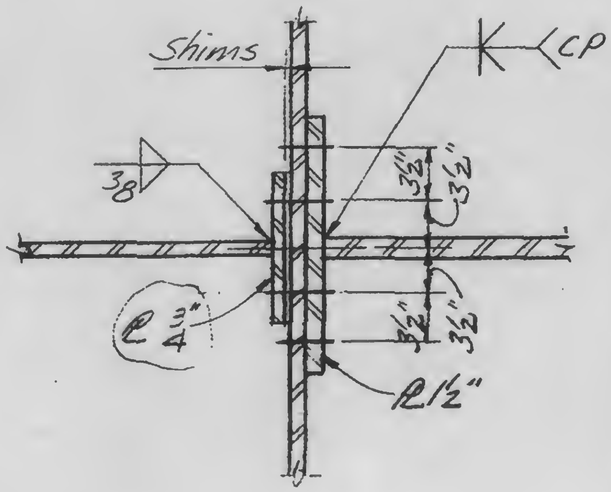

LICENSED PROFESSIONAL ENGINEER
LESLIE E. ROBERTSON
No. 34960
UNIVERSITY OF THE STATE OF NEW YORK

DESIGNED

DRAWN

REVIEWED

A | B | C

13-K3.3-2